ARTISAN®
TECHNOLOGY GROUP

Your **definitive** source for quality pre-owned equipment.

Artisan Technology Group
(217) 352-9330 | sales@artisantg.com | artisantg.com

Full-service, independent repair center
with experienced engineers and technicians on staff.

We buy your excess, underutilized, and idle equipment
along with credit for buybacks and trade-ins.

Custom engineering
so your equipment works exactly as you specify.

- Critical and expedited services
- In stock / Ready-to-ship
- Leasing / Rentals / Demos
- ITAR-certified secure asset solutions

Expert team | Trust guarantee | 100% satisfaction

All trademarks, brand names, and brands appearing herein are the property of their respective owners.

Find the *Bosch / Rexroth / Indramat PPC.R02.2N-N-N1-V2-NN-FW* at our website: *Click HERE*

Rexroth

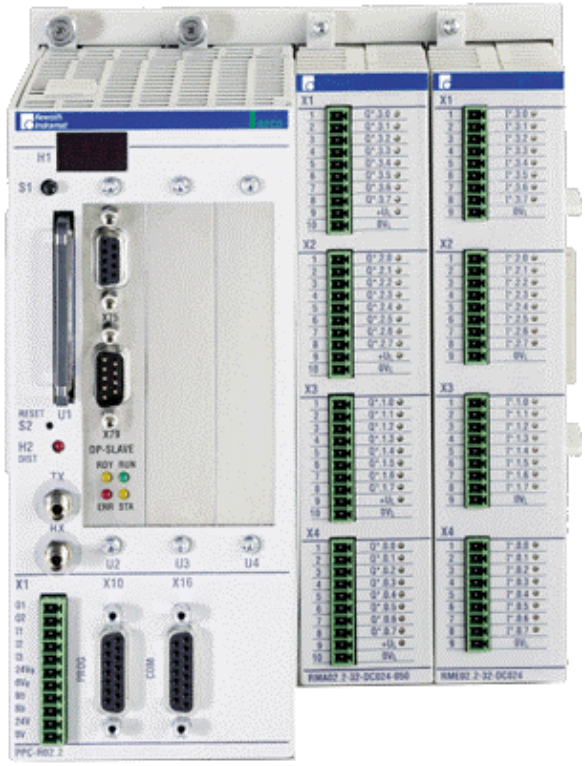

PPC-R0*.2

Project Planning Manual

SYSTEM200

DOK-CONTRL-PPC-R0*.2**-PR03-EN-P

Rexroth Indramat

Artisan Technology Group - Quality Instrumentation ... Guaranteed | (888) 88-SOURCE | www.artisantg.com

Title

PPC-R0*.2

Type of Documentation **Project Planning Manual**

Document Typecode DOK-CONTRL-PPC-R0*.2**-PR03-EN-P

Internal File Reference Document Number, 120-0400-B329-03/EN

Purpose of Documentation This documentation describes …

- to describe the hardware functions of the PPC-R
- to specify the technical data
- to specify the external dimensions

Record of Revisions

Description	Release Date	Notes
120-0400-B329-01/EN	04/00	First edition
120-0400-B329-02/EN	05/00	Revision
120-0400-B329-03/EN	02/02	Revision

Copyright © 2002 Rexroth Indramat GmbH

Copying this document, giving it to others and the use or communication of the contents thereof without express authority, are forbidden. Offenders are liable for the payment of damages. All rights are reserved in the event of the grant of a patent or the registration of a utility model or design (DIN 34-1).

Validity The specified data is for product description purposes only and may not be deemed to be guaranteed unless expressly confirmed in the contract. All rights are reserved with respect to the content of this documentation and the availability of the product.

Published by Rexroth Indramat GmbH
Bgm.-Dr.-Nebel-Str. 2 • D-97816 Lohr a. Main

Telephone +49 (0)93 52/40-0 • Tx 68 94 21 • Fax +49 (0)93 52/40-48 85

http://www.boschrexroth.de/

Dept. BRC/EP6 (WB/CV)

Note This document has been printed on chlorine-free bleached paper.

Artisan Technology Group - Quality Instrumentation ... Guaranteed | (888) 88-SOURCE | www.artisantg.com

Contents

1 General Information 1-1

1.1 Brief Description ... 1-1
1.2 Installation Dimensions ... 1-3
PPC-R01.2 and PPC-R02.2 ... 1-3
Installation dimensions of module carrier RMB02.2-02 ... 1-4
Installation dimensions of module carrier RMB02.2-04 ... 1-5
1.3 Installation Instructions ... 1-6
Installing the module carriers ... 1-6
Arrangement of the module carriers ... 1-6
Installing the modules ... 1-7
Grounding ... 1-8
1.4 Slot Addressing of the Module Carriers ... 1-9
1.5 Combination Options Module Carrier - PPC - I/O Module ... 1-10
1.6 Specifications ... 1-11
General Information ... 1-11
Power supply ... 1-11
I/O Bus supply by control ... 1-11
Digital inputs and outputs ... 1-12
EMC ... 1-12
DERATING I/O Bus supply ... 1-12
Interfaces ... 1-12
1.7 Connecting the Power Supply ... 1-13
1.8 Connecting Inputs and Outputs ... 1-14
1.9 Connector Pin Assignments ... 1-14
X1 (11-way Phoenix connector) ... 1-14
PROG / COM interface (X10, X16) ... 1-15
BT bus (X15) ... 1-15

2 Important directions for use 2-1

2.1 Appropriate use ... 2-1
Introduction ... 2-1
Areas of use and application ... 2-2
2.2 Inappropriate use ... 2-2

3 Safety Instructions for Electric Drives and Controls 3-1

3.1 Introduction ... 3-1
3.2 Explanations ... 3-1
3.3 Hazards by Improper Use ... 3-2

Rexroth Indramat
Artisan Technology Group - Quality Instrumentation ... Guaranteed | (888) 88-SOURCE | www.artisantg.com

3.4 General Information ... 3-3
3.5 Protection Against Contact with Electrical Parts ... 3-5
3.6 Protection Against Electric Shock by Protective Low Voltage (PELV) ... 3-7
3.7 Protection Against Dangerous Movements ... 3-7
3.8 Protection Against Magnetic and Electromagnetic Fields During Operation and Mounting ... 3-9
3.9 Protection Against Contact with Hot Parts ... 3-10
3.10 Protection During Handling and Mounting ... 3-10
3.11 Battery Safety ... 3-11
3.12 Protection Against Pressurized Systems ... 3-11

4 PPC-R Configuration Features 4-1

4.1 Hardware Configuration ... 4-1
PPC-R ... 4-1
PSM PC card compatible firmware module ... 4-1
Options ... 4-1

5 Ordering Information 5-1

5.1 Type Code PPC-R01.2 ... 5-1
5.2 Type Code PPC-R02.2 ... 5-2

6 List of Figures 6-1

7 Index 7-1

8 Service & Support 8-1

8.1 Helpdesk ... 8-1
8.2 Service-Hotline ... 8-1
8.3 Internet ... 8-1
8.4 Vor der Kontaktaufnahme... - Before contacting us... ... 8-1
8.5 Kundenbetreuungsstellen - Sales & Service Facilities ... 8-2

Artisan Technology Group - Quality Instrumentation ... Guaranteed | (888) 88-SOURCE | www.artisantg.com

1 General Information

1.1 Brief Description

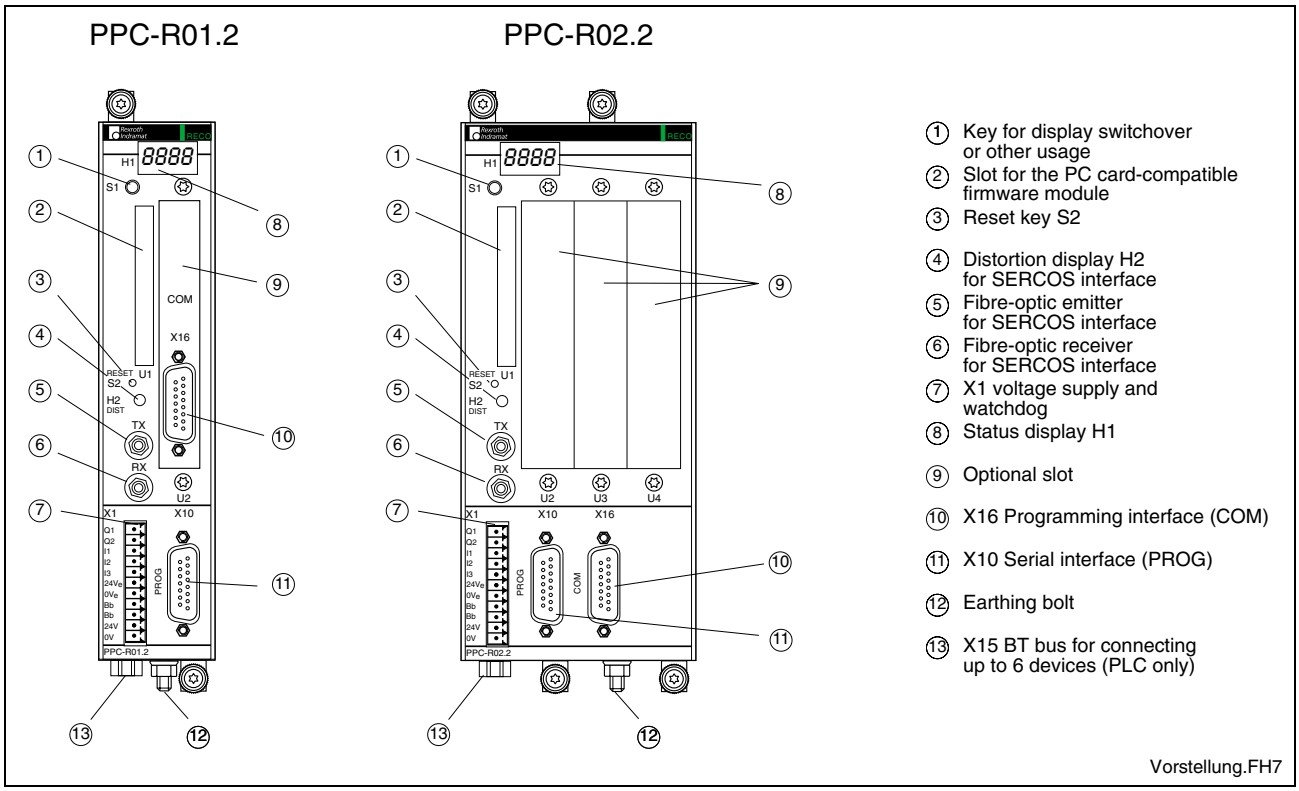

Fig. 1-1: PPC-R01.2 and PPC-R02.2

The PPC-R unit is a powerful controller in a small size in IP 20 rating. It is a general-purpose platform that works as a PLC or as an NC controller, depending on the application and the loaded software.

The PPC-R unit exists with two enclosure versions of different width. A single-width version and a double-width version.

The two interfaces that are available on the controller are fully connected according to the Indramat standard (SIS = Serial Indramat Interface). The data transfer type (function) is only selected by the related application (RS232/RS422/RS485). With **PPC-R01**, the COM interface is brought out via a separate slot plate if this has not yet been assigned for a different purpose (by the PC/104 Field bus, for example).

Furthermore, the PPC-R unit has a BT bus (operator input terminal bus) that permits application-related operator input terminals (BTM15/16, BTA20, etc.) to be used. This is possible with a cable length of up to 50 m.

Artisan Technology Group - Quality Instrumentation ... Guaranteed | (888) 88-SOURCE | www.artisantg.com

To install the PPC-R unit, a module carrier system is used that consists of one or more RMB02.2-04 units. The double carrier RMB02.2-02 can only be used as an installation carrier. It is merely used for fixing the PPC-R units; RECO modules cannot be controlled. Interconnecting several PPC-R units via a backplane is not possible either.

The PPC-R01.2 unit occupies one slot in the module carrier; the PPC-R02.2 occupies two units. In this carrier system, the PPC-R unit can handle up to 15 further I/O modules (RME02.2..., RMA02.2... or RMC02.2...).

Depending on the application, the PPC-R has PC/104 modules fitted that, for example, can be used for open field bus interfaces, such as Interbus, Profibus, etc.

Artisan Technology Group - Quality Instrumentation ... Guaranteed | (888) 88-SOURCE | www.artisantg.com

1.2 Installation Dimensions

PPC-R01.2 and PPC-R02.2

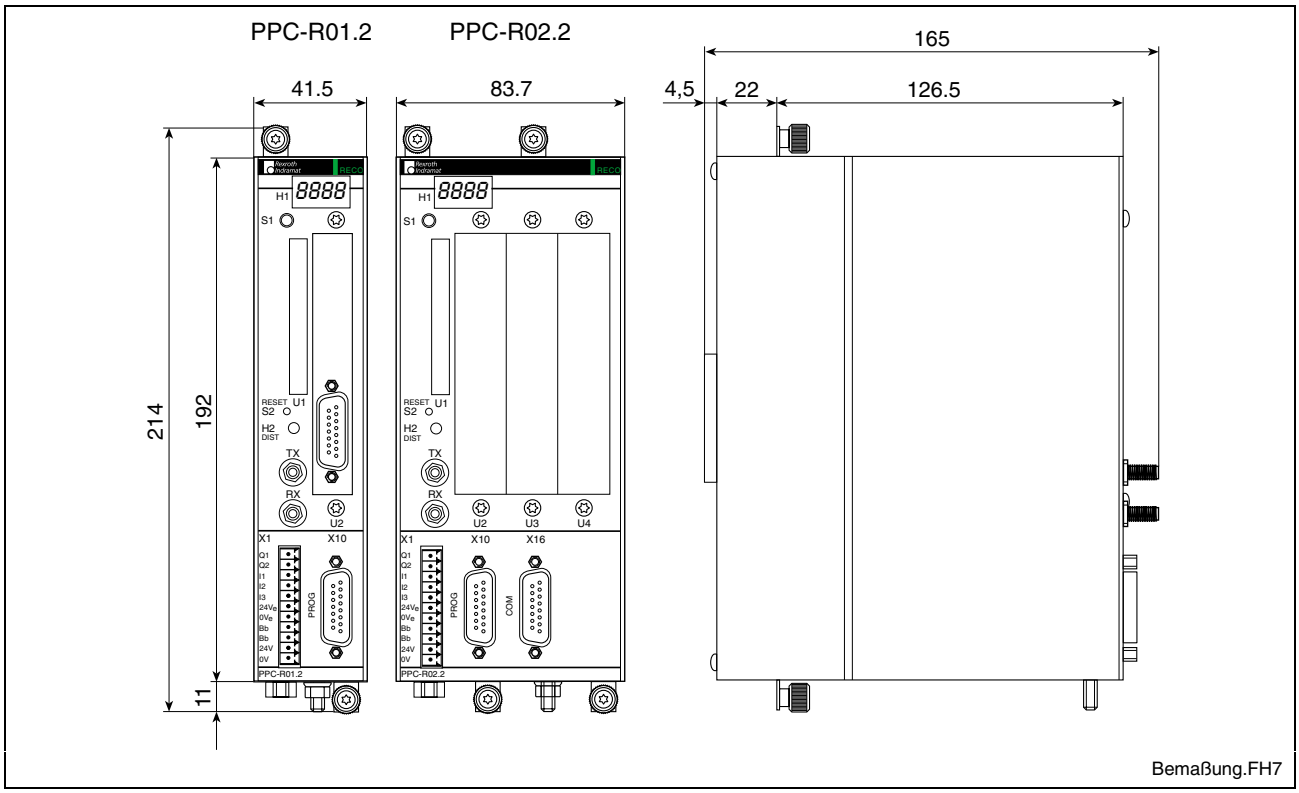

Fig. 1-2: Dimensioned drawing PPC-R01.2 and PPC-R02.2

Artisan Technology Group - Quality Instrumentation ... Guaranteed | (888) 88-SOURCE | www.artisantg.com

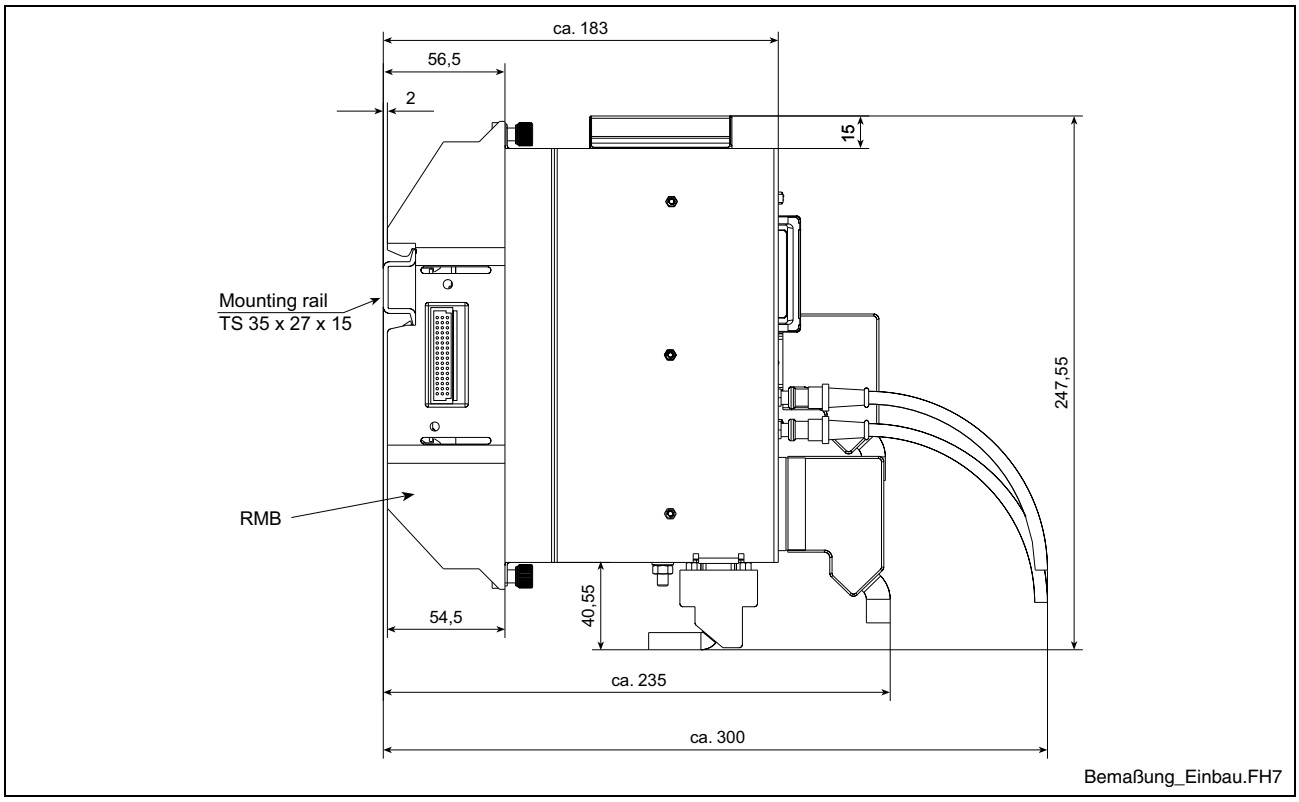

Fig. 1-3: Installation dimensions of PPC-R01.2 and PPC-R02.2

Installation dimensions of module carrier RMB02.2-02

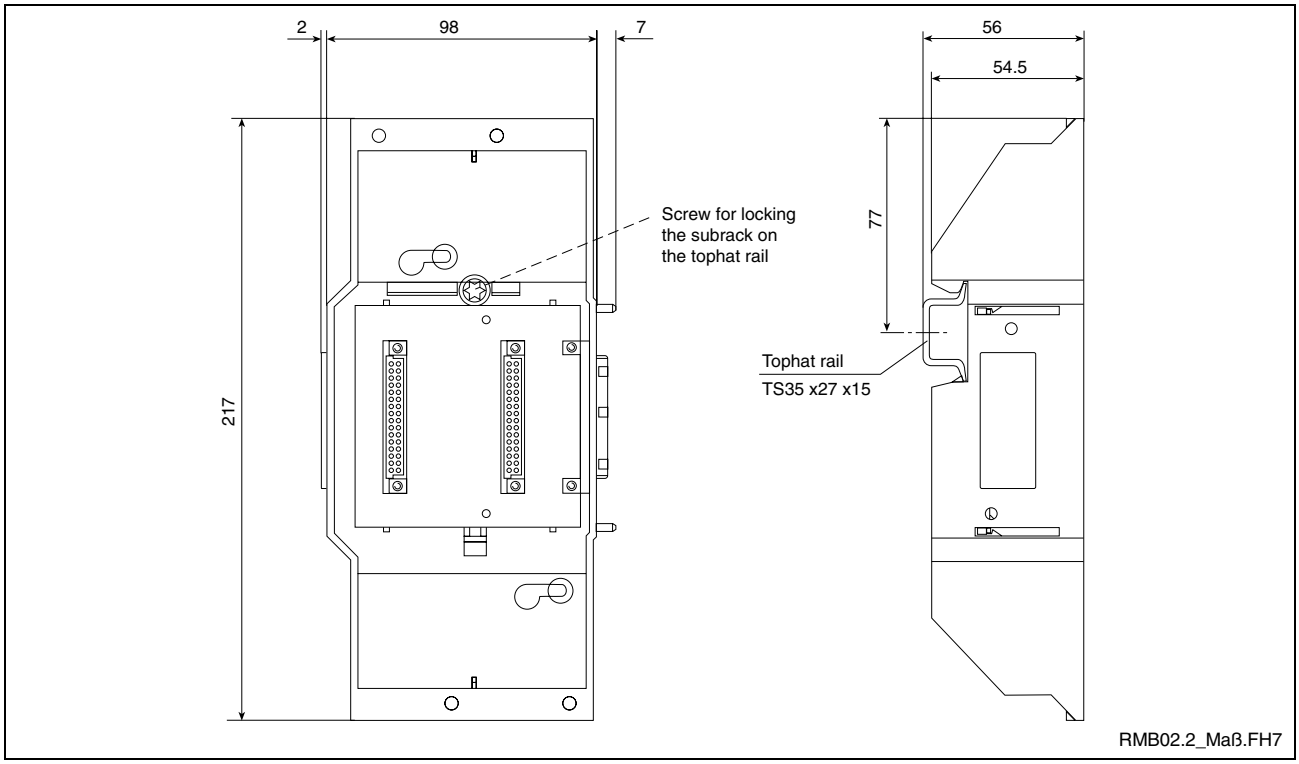

Fig. 1-4: Module carrier RMB02.2-02

Artisan Technology Group - Quality Instrumentation ... Guaranteed | (888) 88-SOURCE | www.artisantg.com

Installation dimensions of module carrier RMB02.2-04

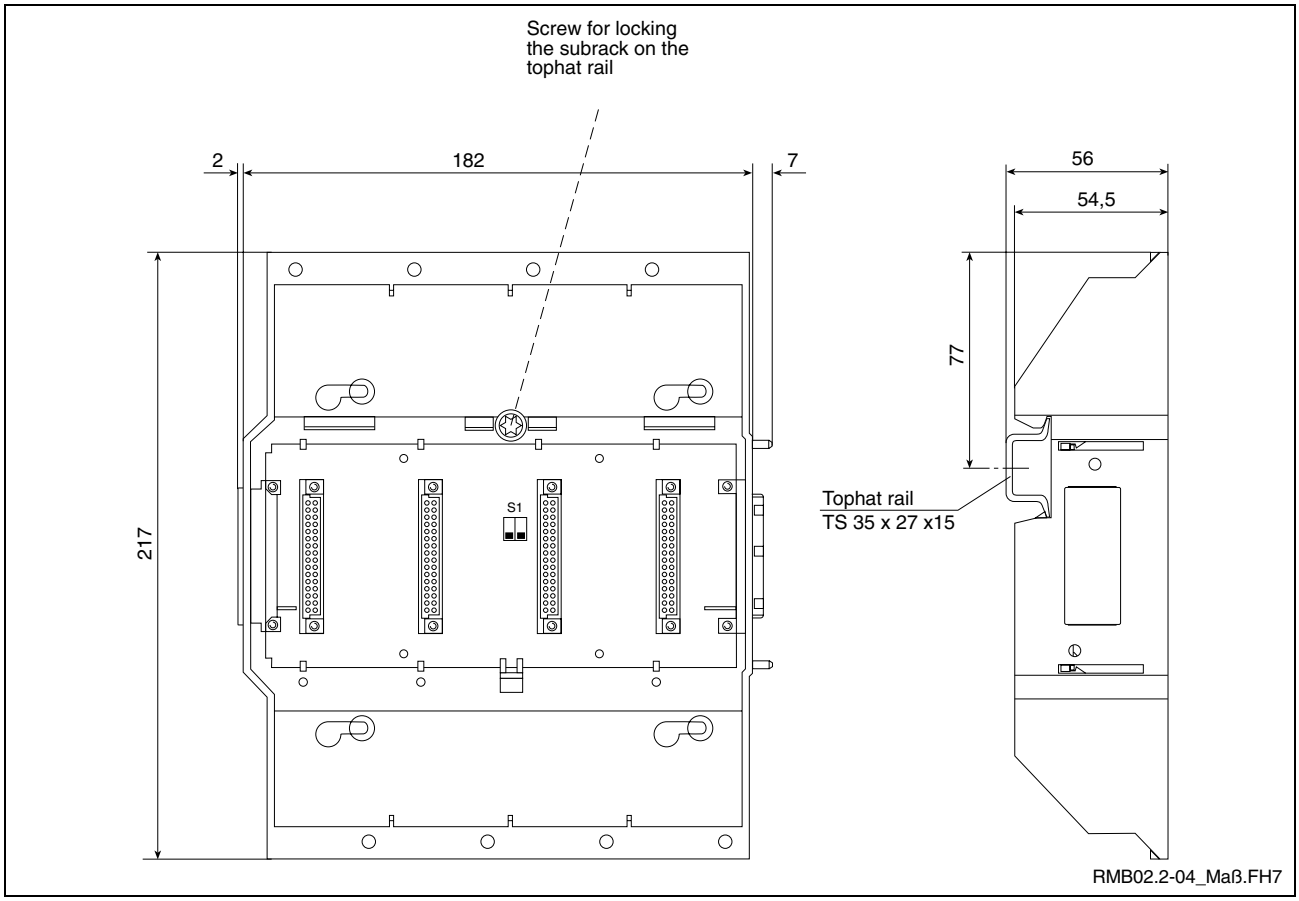

Fig. 1-5: Module carrier RMB02.2-04

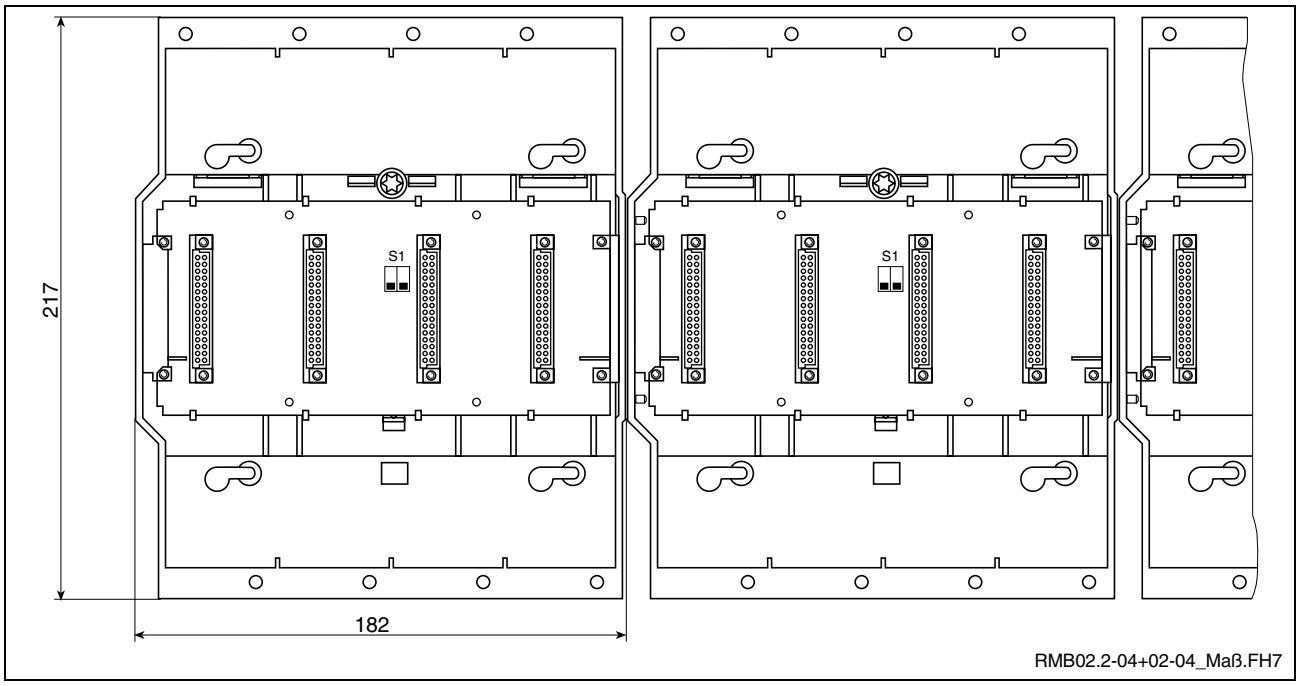

Fig. 1-6: Side-by-side installation of several RMB02.2-04 module carriers

Rexroth Indramat
Artisan Technology Group - Quality Instrumentation ... Guaranteed | (888) 88-SOURCE | www.artisantg.com

1.3 Installation Instructions

The module carriers must first be installed before the PPC-R units can be installed. These module carriers are equipped with the PPC-R unit and, according to the requirements, with the related I/O modules (RECO02 modules).

Installing the module carriers

To install the RMB02.2-04 module carrier, you must latch it onto a DIN rail TS 35x27x15 and secure it with a retaining screw.

Up to four RMB02.2-04 module carriers can be installed side by side. The PPC-R must be in slot 0 if it shall be able to control the RECO bus. Slot addressing requires the DIP switches on the bus boards of the RMB02.2-04 module carriers to be configured (Fig. 1-9: Setting the slot address). The dual carrier RMB02.2-02 is used if the PCR-R shall be used on its own without RECO bus.

Arrangement of the module carriers

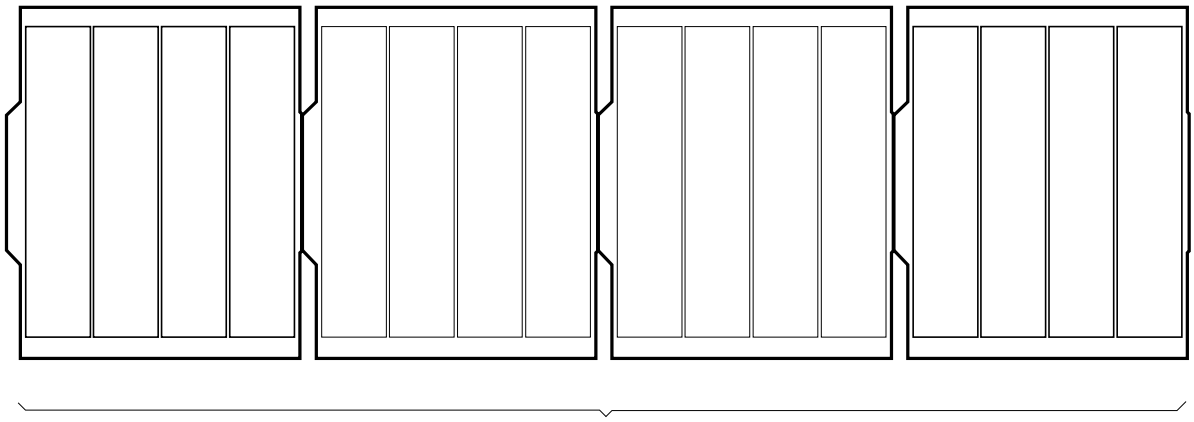

Fig. 1-7: Maximum configuration RMB02.2-04

Artisan Technology Group - Quality Instrumentation ... Guaranteed | (888) 88-SOURCE | www.artisantg.com

Installing the modules

WARNING

Modules can be damaged.

⇒ Connector and modules may only be inserted or removed when the power is switched off.

Starting with a PPC-R in slot 0 (left-hand side), the modules are plugged into the RMB02.2-04 module carrier. Each module is secured with two fixing screws. The I/O modules (RECO02.2) are added in the slots 1-15 or 2-15 (with PPC-R02.2) to the right-hand side of the PPC-R. You may leave gaps to be able to install additional modules later.

Note: Prior to commissioning, you must tighten the fixing screws of the module carriers in order to avoid lateral movements that may lead to a disconnection of the connectors. (The location of the screws is shown in Fig. 1-5: Module carrier RMB02.2-04). The modules must be screwed to the module carrier.

Artisan Technology Group - Quality Instrumentation ... Guaranteed | (888) 88-SOURCE | www.artisantg.com

Grounding

Grounding the controller and screening the electronic components requires a grounding cable of at least 6mm² to be laid between the grounding stud of the controller to the central grounding point of the machine. The other devices of the machine must be grounded in a star-shaped configuration (see Fig. 1-8: System grounding with PPC-R). The power supply must be grounded in the same way.

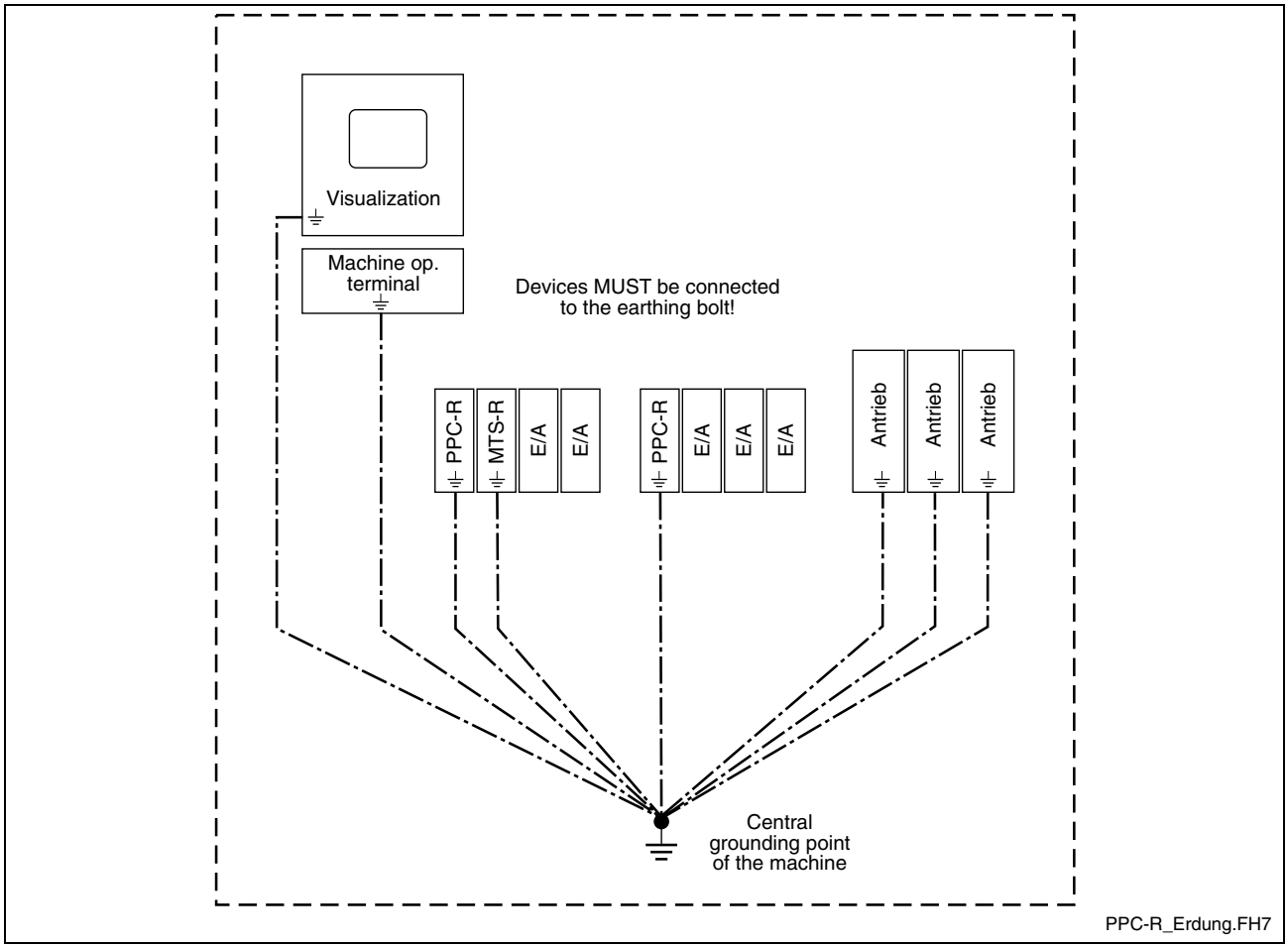

Fig. 1-8: System grounding with PPC-R

Artisan Technology Group - Quality Instrumentation ... Guaranteed | (888) 88-SOURCE | www.artisantg.com

1.4 Slot Addressing of the Module Carriers

A maximum of 4 module carriers RMB02.2-04 can be installed side by side. To be able to address the module carriers, there is a DIP switch on the bus board of the module carriers. Depending on the module carrier, the switch must be set to the corresponding module carrier number (module carrier address 00-03, see diagram below). Each module carrier number may only be set once.

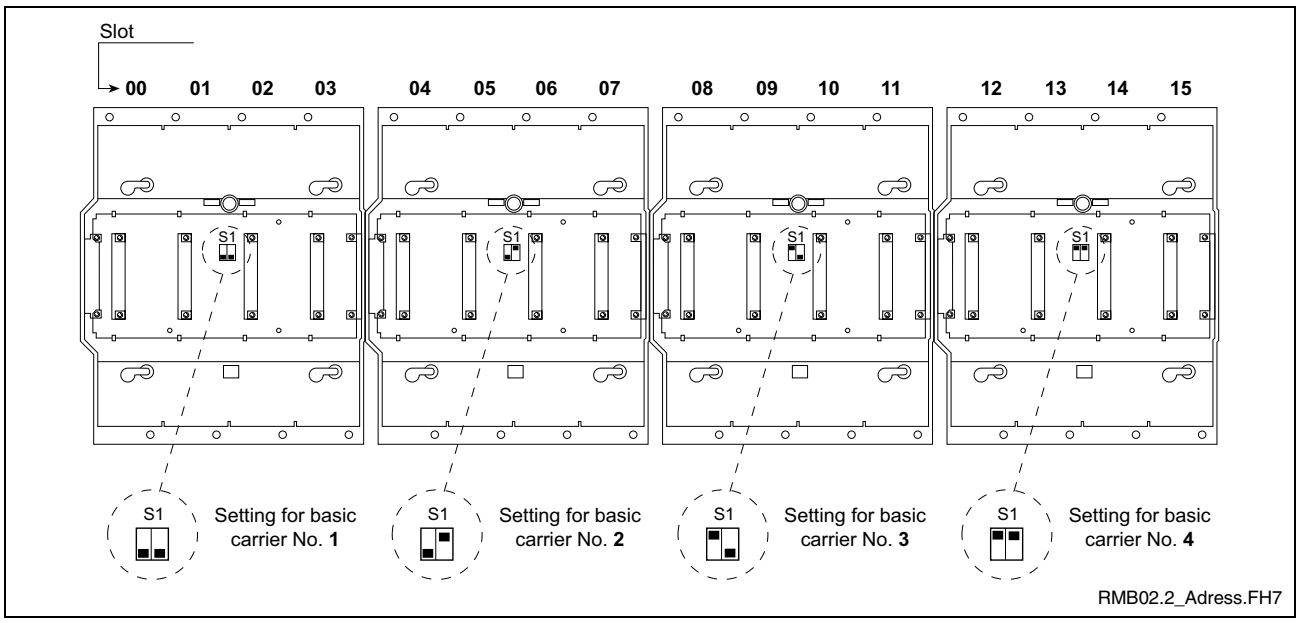

Fig. 1-9: Setting the slot address

Rexroth Indramat
Artisan Technology Group - Quality Instrumentation ... Guaranteed | (888) 88-SOURCE | www.artisantg.com

1.5 Combination Options Module Carrier - PPC - I/O Module

Structure	PPC	I/O	Remark
one module carrier RMB02.2-02 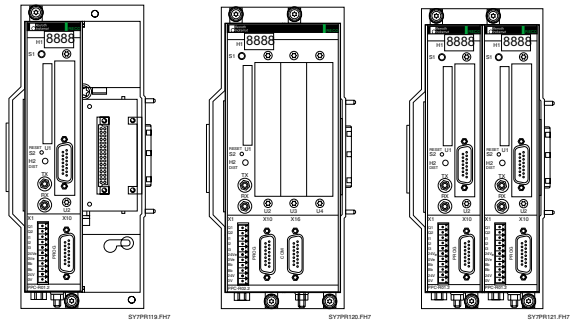	1 x PPC-R01.2	without I/O	
	1 x PPC-R02.2	without I/O	
	2 x PPC-R01.2	without I/O	
one module carrier RMB02.2-04 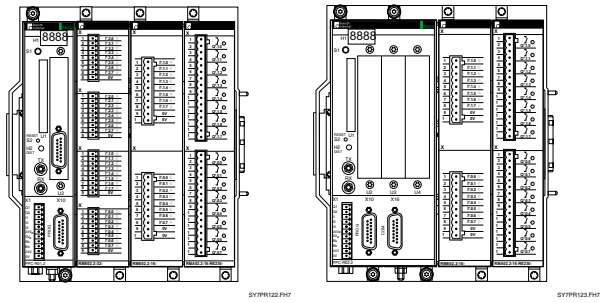	1 x PPC-R01.2	with I/O	PPC must be at slot 0 of an fourfold module carrier (see Fig. 1-9 , module carrier no. 1 left slot).
	1 x PPC-R02.2	with I/O	
several module carrier follows the others 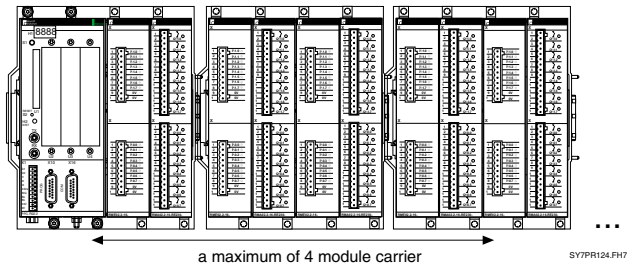	1 x PPC-R01.2	with I/O	Only PPC at slot 0 operates I/O, the remaining PPC-R have **no** access on I/O! (slot 0: see Fig. 1-9 , module carrier no. 1 left slot)
	1 x PPC-R02.2	with I/O	
	several PPC-R	without I/O	
	sveral PPC-R	with I/O	

Fig. 1-10: Combination options module carrier - PPC - I/O module

Artisan Technology Group - Quality Instrumentation ... Guaranteed | (888) 88-SOURCE | www.artisantg.com

1.6 Specifications

General Information

Attachment in the control cabinet	Module carrier RMB02.2-02/RMB02.2-04
Housing dimensions (B x H x D):	PPC-R01.2 = 41.5 x 192 x 150 mm PPC-R02.2 = 83.7 x 192 x 150 mm
Weight:	PPC-R01.2 = 1.1 kg PPC-R02.2 = 1.3 kg
Protection category:	IP20, EN60529
Ambient temperature:	0...+45 °C (operation) -25...+70 °C (transport, storage)
Relative humidity :	10...95 %, no condensation (operation) 5...95 %, no condensation (transport, storage)
Air pressure:	86...106 kPa (operation) 70...106 kPa (transport, storage)
Battery backup (only included if the optional PMM memory module and the real-time clock are used)	To be replaced every year
Battery type	Order name: Batterie Lithium 3,5V Konfektioniert (Mat. Nr. 226423)

Fig. 1-11: General specifications

Power supply

Rated value	24 V_{DC}
Tolerance	-15 % / +20 % (according to EN61131-2 1994)
Ripples	5 % max.
Permissible range	19.2...30 V_{DC} (ripple factor included)
Max. current consumption on 24 V_{DC} (PPC-R01) (PPC-R02)	 0.7 A 1.2 A (+2.3 A max. I/O BUS supply)
required fuse in the supply cable	max. 4 A time-lag for 24V max. 2 A time-lag for 24Ve
Cable cross section for supply:	0.75...1.5 mm^2 (depending on the power demand)

Fig. 1-12: Power supply

I/O Bus supply by control

Module supply 24 V	max 2.3 A
Module supply 5 V	max 3.0 A
Total power	max 52 W (heed the Derating)

Fig. 1-13: I/O Bus supply by control

Artisan Technology Group - Quality Instrumentation ... Guaranteed | (888) 88-SOURCE | www.artisantg.com

Digital inputs and outputs

3 digital Inputs (potential-free)	Current-sinking to ground $V_{i,Low}$ = 0...5 V_{DC}; $V_{i,High}$ = 15...30 V_{DC} I_{min} = 10 mA
2 digital Outputs (potential-free)	I_{max} = 0.5 A; $V_{OH, min}$ = U_{EXT} -3 V_{DC} delay = 400 µs max. (short-circuit-proof)
1 Bb – relay (ready for operation) (system monitoring)	NO contact V_n = 24 V_{DC}, I_{max} = 150 mA min. 500 000 switch cycles (overcurrent protected)

Fig. 1-14: Inputs and outputs

EMC

Emitted interference to EN 55022	Class A (industrial environment)
Noise immunity to EN 61000-4-2 (ESD)	Rating criterion B
Noise immunity to EN 61000-4-4 (Burst)	Rating criterion B
Noise immunity to EN 61000-5-5 (Surge)	Rating criterion B

Fig. 1-15: EMC data

DERATING I/O Bus supply

0 – 35 °C	100 % (52 W)
35 – 45°C	85 % (44 W)

Fig. 1-16: DERATING I/O Bus supply

Interfaces

Programming interface (PROG)	RS232/RS422/RS485 (D-SUB, 15-way female connector), isolated
General serial interface (COM)	RS232/RS422/RS485 (D-SUB, 15-way female connector)
BT bus	Indramat BT bus (D-SUB, 9-way female connector)

Fig. 1-17: Interface specifications

Artisan Technology Group - Quality Instrumentation ... Guaranteed | (888) 88-SOURCE | www.artisantg.com

1.7 Connecting the Power Supply

WARNING

Modules can be damaged.

⇒ Connector and modules may only be inserted or removed when the power is switched off.

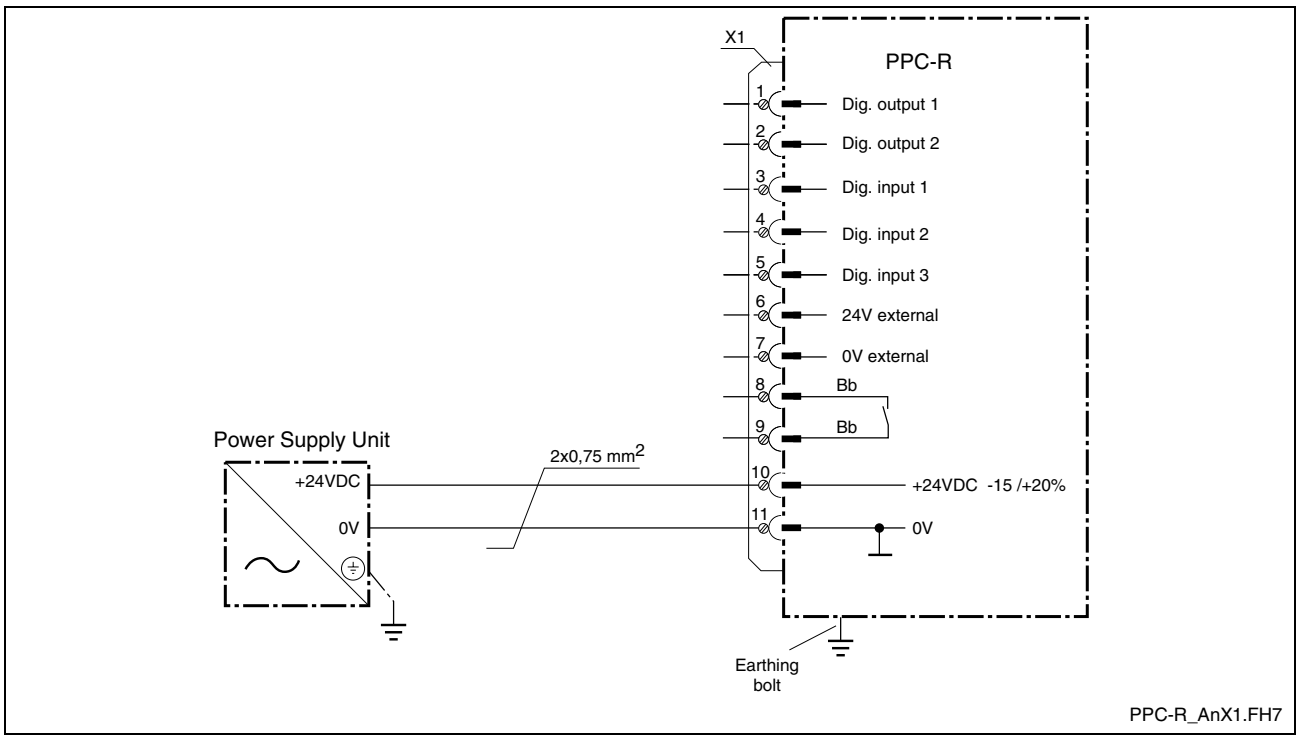

Fig. 1-18: Connecting the power supply:

Artisan Technology Group - Quality Instrumentation ... Guaranteed | (888) 88-SOURCE | www.artisantg.com

1.8 Connecting Inputs and Outputs

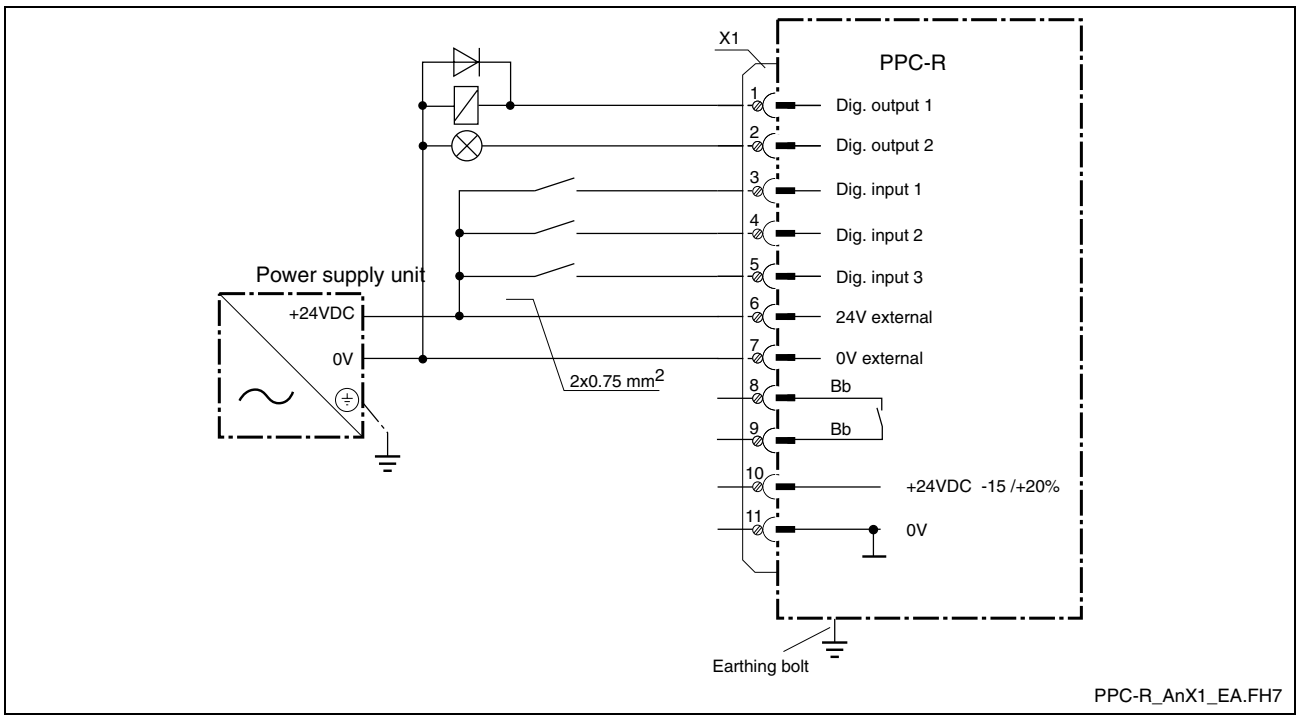

Fig. 1-19: Connecting inputs and outputs

1.9 Connector Pin Assignments

X1 (11-way Phoenix connector)

Pin	Signal name
1	Digital output 1 (Q1)
2	Digital output 2 (Q2)
3	Digital input 1 (I1)
4	Digital input 2 (I1)
5	Digital input 3 (I1)
6	24V external voltage
7	External GND
8	BB relay (watchdog)
9	BB relay (watchdog)
10	24V
11	GND

Fig. 1-20: Connector pin assignments X1

Artisan Technology Group - Quality Instrumentation ... Guaranteed | (888) 88-SOURCE | www.artisantg.com

PROG / COM interface (X10, X16)

Serial interface to Indramat standard (SIS – 15-way DSUB female connectors).

Both interfaces have full modem capability. The PROG interface is isolated.

Pin	Signal name
1	(Protected ground) NC
2	RS232 TxD
3	RS232 RxD
4	RS422 RxD+ or RS485+
5	RS422 RxD- or RS485-
6	DSR
7	Signal ground
8	DCD
9	RS422 TxD+
10	GND
11	RS422 TxD-
12	+5V
13	RTS
14	CTS
15	DTR

Fig. 1-21: Interface pin assignments of X10 and X16

BT bus (X15)

PIN	Signal name	PIN	Signal name
1	TxD+	2	RxD+
3	GND	4	NC
5	+5V	6	TxD-
7	RxD-	8	NC
9	NC		

Fig. 1-22: Connector pin assignments BT-BUS X15

Rexroth Indramat
Artisan Technology Group - Quality Instrumentation ... Guaranteed | (888) 88-SOURCE | www.artisantg.com

Artisan Technology Group - Quality Instrumentation ... Guaranteed | (888) 88-SOURCE | www.artisantg.com

2 Important directions for use

2.1 Appropriate use

Introduction

Rexroth Indramat products represent state-of-the-art developments and manufacturing. They are tested prior to delivery to ensure operating safety and reliability.

The products may only be used in the manner that is defined as appropriate. If they are used in an inappropriate manner, then situations can develop that may lead to property damage or injury to personnel.

Note: Rexroth Indramat, as manufacturer, is not liable for any damages resulting from inappropriate use. In such cases, the guarantee and the right to payment of damages resulting from inappropriate use are forfeited. The user alone carries all responsibility of the risks.

Before using Rexroth Indramat products, make sure that all the pre-requisites for appropriate use of the products are satisfied:

- Personnel that in any way, shape or form uses our products must first read and understand the relevant safety instructions and be familiar with appropriate use.
- If the product takes the form of hardware, then they must remain in their original state, in other words, no structural changes are permitted. It is not permitted to decompile software products or alter source codes.
- Do not mount damaged or faulty products or use them in operation.
- Make sure that the products have been installed in the manner described in the relevant documentation.

Artisan Technology Group - Quality Instrumentation ... Guaranteed | (888) 88-SOURCE | www.artisantg.com

Areas of use and application

The PPC-R01.2 and PPC-R02.2 units made by Rexroth Indramat are designed for installation in the RECO02 module carrier system. The PPC-R unit is designed for use in the following cases:

- as control for Motion- and PLC applications

Note: The PPC-R unit may only be used with the accessories and parts specified in this document. If a component has not been specifically named, then it may not be either mounted or connected. The same applies to cables and lines.

Operation is only permitted in the specified configurations and combinations of components using the software and firmware as specified in the relevant function descriptions.

Available for an application-specific use of the PPC-R unit are configurations with different field buses and different serial interfaces.

Typical areas of application of a PPC-R unit are:

- Printing and Paper
- Packaging
- Machine tools
- Machining center

The PPC-R unit may only be operated under the assembly, installation and ambient conditions as described here (temperature, system of protection, humidity, EMC requirements, etc.) and in the position specified.

2.2 Inappropriate use

Using the motors outside of the above-referenced areas of application or under operating conditions other than described in the document and the technical data specified is defined as “inappropriate use".

The terminals may not be used if

- they are subject to operating conditions that do not meet the above specified ambient conditions. This includes, for example, operation under water, in the case of extreme temperature fluctuations or extreme maximum temperatures or if
- Rexroth Indramat has not specifically released them for that intended purpose. Please note the specifications outlined in the general Safety Instructions!

Artisan Technology Group - Quality Instrumentation ... Guaranteed | (888) 88-SOURCE | www.artisantg.com

3 Safety Instructions for Electric Drives and Controls

3.1 Introduction

Read these instructions before the initial startup of the equipment in order to eliminate the risk of bodily harm or material damage. Follow these safety instructions at all times.

Do not attempt to install or start up this equipment without first reading all documentation provided with the product. Read and understand these safety instructions and all user documentation of the equipment prior to working with the equipment at any time. If you do not have the user documentation for your equipment, contact your local Rexroth Indramat representative to send this documentation immediately to the person or persons responsible for the safe operation of this equipment.

If the equipment is resold, rented or transferred or passed on to others, then these safety instructions must be delivered with the equipment.

WARNING

Improper use of this equipment, failure to follow the safety instructions in this document or tampering with the product, including disabling of safety devices, may result in material damage, bodily harm, electric shock or even death!

3.2 Explanations

The safety instructions describe the following degrees of hazard seriousness in compliance with ANSI Z535. The degree of hazard seriousness informs about the consequences resulting from non-compliance with the safety instructions.

Warning symbol with signal word	Degree of hazard seriousness according to ANSI
DANGER	Death or severe bodily harm will occur.
WARNING	Death or severe bodily harm may occur.
CAUTION	Bodily harm or material damage may occur.

Fig. 3-1: Hazard classification (according to ANSI Z535)

Artisan Technology Group - Quality Instrumentation ... Guaranteed | (888) 88-SOURCE | www.artisantg.com

3.3 Hazards by Improper Use

DANGER	**High voltage and high discharge current! Danger to life or severe bodily harm by electric shock !**
DANGER	**Dangerous movements! Danger to life, severe bodily harm or material damage by unintentional motor movements!**
WARNING	**High electrical voltage due to wrong connections! Danger to life or bodily harm by electric shock!**
WARNING	**Health hazard for persons with heart pacemakers, metal implants and hearing aids in proximity to electrical equipment!**
CAUTION	**Surface of machine housing could be extremely hot! Danger of injury! Danger of burns!**
CAUTION	**Risk of injury due to improper handling! Bodily harm caused by crushing, shearing, cutting and mechanical shock or incorrect handling of pressurized systems!**
CAUTION	**Risk of injury due to incorrect handling of batteries!**

Artisan Technology Group - Quality Instrumentation ... Guaranteed | (888) 88-SOURCE | www.artisantg.com

3.4 General Information

- Rexroth Indramat GmbH is not liable for damages resulting from failure to observe the warnings provided in this documentation.
- Read the operating, maintenance and safety instructions in your language before starting up the machine. If you find that you can not completely understand the documentation for your product, please ask your supplier to clarify.
- Proper and correct transport, storage, assembly and installation as well as care in operation and maintenance are prerequisites for optimal and safe operation of this equipment.
- Only persons who are trained and qualified for the use operation of the equipment may work on this equipment or within its proximity. The persons are qualified if they have sufficient knowledge of the assembly, installation and operation of the equipment as well as an understanding of all warnings and precautionary measures noted in these instructions.
  Furthermore, they must be trained, instructed and qualified to switch electrical circuits and equipment on and off in accordance with technical safety regulations, to ground them and to mark them according to the requirements of safe work practices. They must have adequate safety equipment and be trained in first aid.
- Only use spare parts and accessories approved by the manufacturer.
- Follow all safety regulations and requirements for the specific application as practiced in the country of use.
- The equipment is designed for installation in industrial machinery.
- The ambient conditions given in the product documentation must be observed.
- Use only safety features and applications that are clearly and explicitly approved in the Project Planning Manual.
  For example, the following areas of use are not permitted: construction cranes, elevators used for people or freight, devices and vehicles to transport people, medical applications, refinery plants, transport of hazardous goods, nuclear applications, applications sensitive to high frequency, mining, food processing, control of protection equipment (also in a machine).
- The information given in this documentation with regard to the use of the delivered components contains only examples of applications and suggestions.

  The machine and installation manufacturer must
  - make sure that the delivered components are suited for his individual application and check the information given in this documentation with regard to the use of the components,
  - make sure that his application complies with the applicable safety regulations and standards and carry out the required measures, modifications and complements.
- Startup of the delivered components is only permitted once it is sure that the machine or installation in which they are installed complies with the national regulations, safety specifications and standards of the application.
- Operation is only permitted if the national EMC regulations for the application are met.
  The instructions for installation in accordance with EMC requirements

Artisan Technology Group - Quality Instrumentation ... Guaranteed | (888) 88-SOURCE | www.artisantg.com

can be found in the documentation "EMC in Drive and Control Systems."
The machine or installation manufacturer is responsible for compliance with the limiting values as prescribed in the national regulations.

- Technical data, connections and operational conditions are specified in the product documentation and must be followed at all times.

Artisan Technology Group - Quality Instrumentation ... Guaranteed | (888) 88-SOURCE | www.artisantg.com

3.5 Protection Against Contact with Electrical Parts

Note: This section refers to equipment and drive components with voltages above 50 Volts.

Touching live parts with voltages of 50 Volts and more with bare hands or conductive tools or touching ungrounded housings can be dangerous and cause electric shock . In order to operate electrical equipment, certain parts must unavoidably have dangerous voltages applied to them.

DANGER

High electrical voltage! Danger to life, severe bodily harm by electric shock!

⇒ Only those trained and qualified to work with or on electrical equipment are permitted to operate, maintain or repair this equipment.

⇒ Follow general construction and safety regulations when working on high voltage installations.

⇒ Before switching on power the ground wire must be permanently connected to all electrical units according to the connection diagram.

⇒ Do not operate electrical equipment at any time , even for brief measurements or tests,if the ground wire is not permanently connected to the points of the components provided for this purpose.

⇒ Before working with electrical parts with voltage higher than 50 V, the equipment must be disconnected from the mains voltage or power supply. Make sure the equipment cannot be switched on again unintended.

⇒ The following should be observed with electrical drive and filter components:

Wait five (5) minutes after switching off power to allow capacitors to discharge before beginning to work. Measure the voltage on the capacitors before beginning to work to make sure that the equipment is safe to touch.

⇒ Never touch the electrical connection points of a component while power is turned on.

⇒ Install the covers and guards provided with the equipment properly before switching the equipment on. Prevent contact with live parts at any time.

⇒ A residual-current-operated protective device (RCD) must not be used on electric drives! Indirect contact must be prevented by other means, for example, by an overcurrent protective device.

⇒ Electrical Components with exposed live parts and uncovered high voltage terminals must be installed in a protective housing, for example in a control cabinet.

Artisan Technology Group - Quality Instrumentation ... Guaranteed | (888) 88-SOURCE | www.artisantg.com

To be observed with electrical drive and filter components:

DANGER

High electrical voltage on the housing!
High leakage current! Danger to life, danger of injury by electric shock!

⇒ Connect the electrical equipment, the housings of all electrical units and motors permanently with the safety conductor at the ground points before power is switched on. Look at the connection diagram. This is even necessary for brief tests.

⇒ Connect the safety conductor of the electrical equipment always permanently and firmly to the supply mains. Leakage current exceeds 3.5 mA in normal operation.

⇒ Use a copper conductor with at least 10 mm² cross section over its entire course for this safety conductor connection!

⇒ Prior to startups, even for brief tests, always connect the protective conductor or connect with ground wire. Otherwise, high voltages can occur on the housing that lead to electric shock.

Artisan Technology Group - Quality Instrumentation ... Guaranteed | (888) 88-SOURCE | www.artisantg.com

3.6 Protection Against Electric Shock by Protective Low Voltage (PELV)

All connections and terminals with voltages between 0 and 50 Volts on Rexroth Indramat products are protective low voltages designed in accordance with international standards on electrical safety.

WARNING

High electrical voltage due to wrong connections! Danger to life, bodily harm by electric shock !

⇒ Only connect equipment, electrical components and cables of the protective low voltage type (PELV = Protective Extra Low Voltage) to all terminals and clamps with voltages of 0 to 50 Volts.

⇒ Only electrical circuits may be connected which are safely isolated against high voltage circuits. Safe isolation is achieved, for example, with an isolating transformer, an opto-electronic coupler or when battery-operated.

3.7 Protection Against Dangerous Movements

Dangerous movements can be caused by faulty control of the connected motors. Some common examples are:

- improper or wrong wiring of cable connections
- incorrect operation of the equipment components
- wrong input of parameters before operation
- malfunction of sensors, encoders and monitoring device
- defective components
- software or firmware errors

Dangerous movements can occur immediately after equipment is switched on or even after an unspecified time of trouble-free operation.

The monitoring in the drive components will normally be sufficient to avoid faulty operation in the connected drives. Regarding personal safety, especially the danger of bodily injury and material damage, this alone cannot be relied upon to ensure complete safety. Until the integrated monitoring functions become effective, it must be assumed in any case that faulty drive movements will occur. The extent of faulty drive movements depends upon the type of control and the state of operation.

Artisan Technology Group - Quality Instrumentation ... Guaranteed | (888) 88-SOURCE | www.artisantg.com

DANGER

Dangerous movements! Danger to life, risk of injury, severe bodily harm or material damage!

⇒ Ensure personal safety by means of qualified and tested higher-level monitoring device or measures integrated in the installation. Unintended machine motion is possible if monitoring device are disabled, bypassed or not activated.

⇒ Pay attention to unintended machine motion or other malfunction in any mode of operation.

⇒ Keep free and clear of the machine's range of motion and moving parts. Possible measures to prevent people from accidentally entering the machine's range of movement:

- use safety fences
- use safety guards
- use protective coverings
- install light curtains or light barriers

⇒ Fences and coverings must be strong enough to resist maximum possible momentum, especially if break off parts can fly into the environment.

⇒ Mount the emergency stop switch in the immediate reach of the operator. Verify that the emergency stop works before startup. Don't operate the machine if the emergency stop is not working.

⇒ Isolate the drive power connection by means of an emergency stop circuit or use a starting lockout to prevent unintentional start.

⇒ Make sure that the drives are brought to a safe standstill before accessing or entering the danger zone. Safe standstill can be achieved by switching off the power supply contactor or by safe mechanical locking of moving parts.

⇒ Secure vertical axes against falling or dropping after switching off the motor power by, for example:

- mechanically securing the vertical axes
- adding an external braking/ arrester/ clamping mechanism
- ensuring sufficient equilibration of the vertical axes

The standard equipment motor brake or an external brake controlled directly by the drive controller are not sufficient to guarantee personal safety!

Artisan Technology Group - Quality Instrumentation ... Guaranteed | (888) 88-SOURCE | www.artisantg.com

⇒ Disconnect electrical power to the equipment using a master switch and secure the switch against reconnection for:

- maintenance and repair work
- cleaning of equipment
- long periods of discontinued equipment use

⇒ Prevent the operation of high-frequency, remote control and radio equipment near electronics circuits and supply leads. If the use of such equipment cannot be avoided, verify the system and the installation for possible malfunctions in all possible positions of normal use before initial startup. If necessary, perform a special electromagnetic compatibility (EMC) test on the installation.

3.8 Protection Against Magnetic and Electromagnetic Fields During Operation and Mounting

Magnetic and electromagnetic fields generated near current-carrying conductors and permanent magnets in motors represent a serious health hazard to persons with heart pacemakers, metal implants and hearing aids.

WARNING

Health hazard for persons with heart pacemakers, metal implants and hearing aids in proximity to electrical equipment!

⇒ Persons with heart pacemakers, hearing aids and metal implants are not permitted to enter following areas:

- Areas in which electrical equipment and parts are mounted, being operated or started up.
- Areas in which parts of motors with permanent magnets are being stored, operated, repaired or mounted.

⇒ If it is necessary for a person with a heart pacemaker to enter such an area, then a doctor must be consulted prior to doing so. Heart pacemakers that are already implanted or will be implanted in the future, have a considerable varation in their electrical noise immunity. Therefore there are no rules with general validity.

⇒ Persons with hearing aids, metal implants or metal pieces must consult a doctor before they enter the areas described above. Otherwise, health hazards will occur.

Artisan Technology Group - Quality Instrumentation ... Guaranteed | (888) 88-SOURCE | www.artisantg.com

3.9 Protection Against Contact with Hot Parts

CAUTION

Housing surfaces could be extremely hot! Danger of injury! Danger of burns!

⇒ Do not touch housing surfaces near sources of heat! Danger of burns!

⇒ After switching the equipment off, wait at least ten (10) minutes to allow it to cool down before touching it.

⇒ Do not touch hot parts of the equipment, such as housings with integrated heat sinks and resistors. Danger of burns!

3.10 Protection During Handling and Mounting

Under certain conditions, incorrect handling and mounting of parts and components may cause injuries.

CAUTION

Risk of injury by incorrect handling! Bodily harm caused by crushing, shearing, cutting and mechanical shock!

⇒ Observe general installation and safety instructions with regard to handling and mounting.

⇒ Use appropriate mounting and transport equipment.

⇒ Take precautions to avoid pinching and crushing.

⇒ Use only appropriate tools. If specified by the product documentation, special tools must be used.

⇒ Use lifting devices and tools correctly and safely.

⇒ For safe protection wear appropriate protective clothing, e.g. safety glasses, safety shoes and safety gloves.

⇒ Never stand under suspended loads.

⇒ Clean up liquids from the floor immediately to prevent slipping.

Artisan Technology Group - Quality Instrumentation ... Guaranteed | (888) 88-SOURCE | www.artisantg.com

3.11 Battery Safety

Batteries contain reactive chemicals in a solid housing. Inappropriate handling may result in injuries or material damage.

CAUTION

Risk of injury by incorrect handling!

⇒ Do not attempt to reactivate discharged batteries by heating or other methods (danger of explosion and cauterization).

⇒ Never charge non chargable batteries (danger of leakage and explosion).

⇒ Never throw batteries into a fire.

⇒ Do not dismantle batteries.

⇒ Do not damage electrical components installed in the equipment.

Note: Be aware of environmental protection and disposal! The batteries contained in the product should be considered as hazardous material for land, air and sea transport in the sense of the legal requirements (danger of explosion). Dispose batteries separately from other waste. Observe the legal requirements in the country of installation.

3.12 Protection Against Pressurized Systems

Certain motors and drive controllers, corresponding to the information in the respective Project Planning Manual, must be provided with pressurized media, such as compressed air, hydraulic oil, cooling fluid and cooling lubricant supplied by external systems. Incorrect handling of the supply and connections of pressurized systems can lead to injuries or accidents. In these cases, improper handling of external supply systems, supply lines or connections can cause injuries or material damage.

CAUTION

Danger of injury by incorrect handling of pressurized systems !

⇒ Do not attempt to disassemble, to open or to cut a pressurized system (danger of explosion).

⇒ Observe the operation instructions of the respective manufacturer.

⇒ Before disassembling pressurized systems, release pressure and drain off the fluid or gas.

⇒ Use suitable protective clothing (for example safety glasses, safety shoes and safety gloves)

⇒ Remove any fluid that has leaked out onto the floor immediately.

Note: Environmental protection and disposal! The media used in the operation of the pressurized system equipment may not be environmentally compatible. Media that are damaging the environment must be disposed separately from normal waste. Observe the legal requirements in the country of installation.

Artisan Technology Group - Quality Instrumentation ... Guaranteed | (888) 88-SOURCE | www.artisantg.com

Artisan Technology Group - Quality Instrumentation ... Guaranteed | (888) 88-SOURCE | www.artisantg.com

4 PPC-R Configuration Features

4.1 Hardware Configuration

PPC-R

- Power PC - processor
- 8 MB SDRAM
- 256 bytes ser. E^2-PROM
- Four-digit display
- Digital inputs/outputs (3 In / 2 Out)
- 2 serial interfaces to Indramat standard (SIS), X10 isolated
- Real-time clock (as a clock with an optional battery backup and/or elapsed time meter)
- SERCOS interface (SERCON 410 baud)
- RECO/SPS interface
- PC/104 interface

PSM PC card compatible firmware module

This module contains the complete firmware and user software

- 4 MB FLASH memory
- 64 KB nvRAM

Options

- Battery backup for RTC and PMM (option)
- PMM - Memory module
  - 4 MB SRAM (battery backup)

Artisan Technology Group - Quality Instrumentation ... Guaranteed | (888) 88-SOURCE | www.artisantg.com

Artisan Technology Group - Quality Instrumentation ... Guaranteed | (888) 88-SOURCE | www.artisantg.com

5 Ordering Information

5.1 Type Code PPC-R01.2

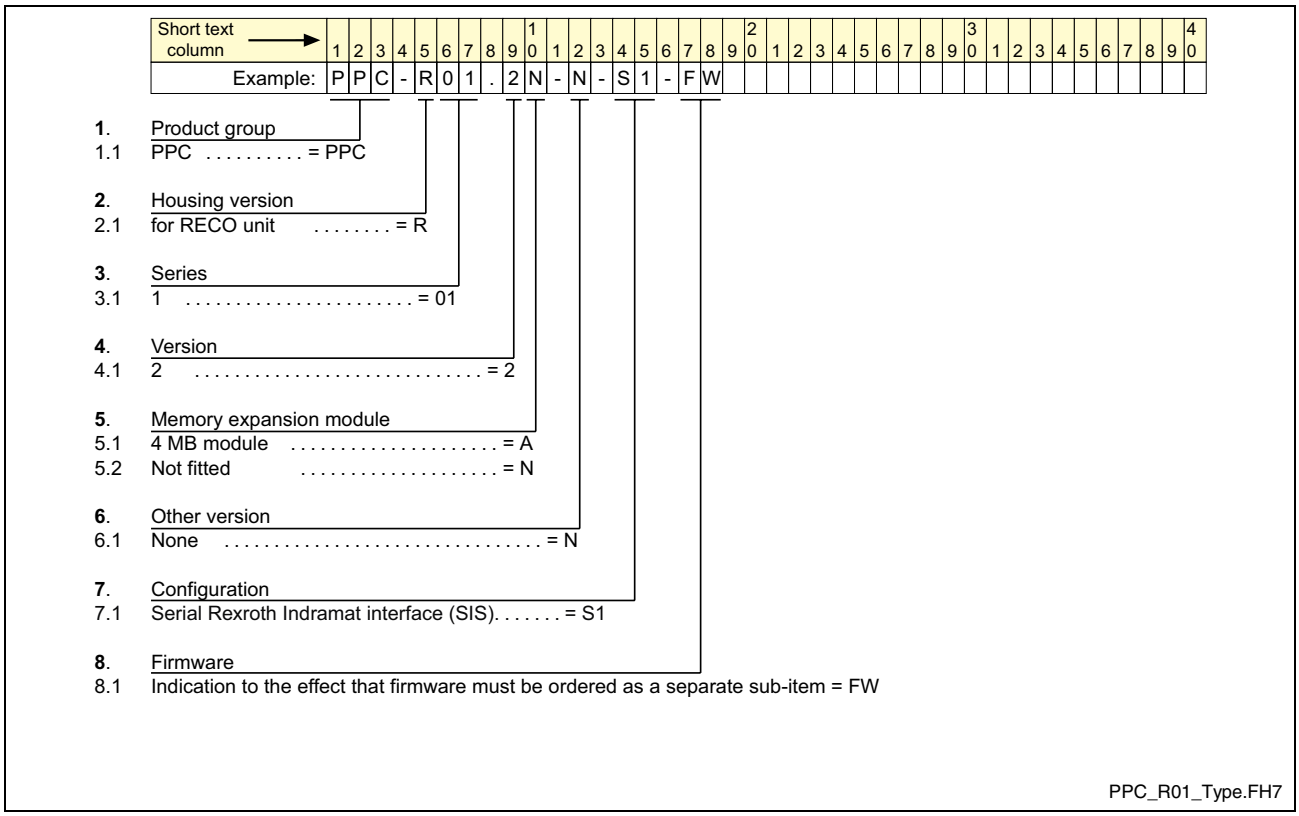

Fig. 5-1: Type code PPC-R01.2

Artisan Technology Group - Quality Instrumentation ... Guaranteed | (888) 88-SOURCE | www.artisantg.com

5.2 Type Code PPC-R02.2

Short text column →	1	2	3	4	5	6	7	8	9	10	1	2	3	4	5	6	7	8	9	20	1	2	3	4	5	6	7	8	9	30	1	2	3	4	5	6	7	8	9	40
Example:	P	P	C	-	R	0	2	.	2	N	-	N	-	N	N	-	N	N	-	N	N	-	F	W																	

1. Product group
1.1 PPC . . . . . = PPC

2. Housing version
2.1 for RECO unit . . . . . = R

3. Series
3.1 2 . . . . . = 02

4. Version
4.1 2 . . . . . = 2

5. Memory expansion module
5.1 4 MB module . . . . . = A
5.2 Not fitted . . . . . = N

6. Other version
6.1 None . . . . . = N

7. Configuration ①
7.1 NN-NN-NN
7.2 NN-P2-NN
7.3 V2-NN-NN

8. Firmware
8.1 Indication to the effect that firmware must be ordered as a separate sub-item = FW

Remark:
① Configuration
NN = not fitted
P2 = PROFIBUS-DP slave module
V2 = DeviceNet slave module

PPC_R02_Type.FH7

Fig. 5-2: Type code PPC-R02.2

Artisan Technology Group - Quality Instrumentation ... Guaranteed | (888) 88-SOURCE | www.artisantg.com

6 List of Figures

Fig. 1-1: PPC-R01.2 and PPC-R02.2 1-1
Fig. 1-2: Dimensioned drawing PPC-R01.2 and PPC-R02.2 1-3
Fig. 1-3: Installation dimensions of PPC-R01.2 and PPC-R02.2 1-4
Fig. 1-4: Module carrier RMB02.2-02 1-4
Fig. 1-5: Module carrier RMB02.2-04 1-5
Fig. 1-6: Side-by-side installation of several RMB02.2-04 module carriers 1-5
Fig. 1-7: Maximum configuration RMB02.2-04 1-6
Fig. 1-8: System grounding with PPC-R 1-8
Fig. 1-9: Setting the slot address 1-9
Fig. 1-10: Combination options module carrier - PPC - I/O module 1-10
Fig. 1-11: General specifications 1-11
Fig. 1-12: Power supply 1-11
Fig. 1-13: I/O Bus supply by control 1-11
Fig. 1-14: Inputs and outputs 1-12
Fig. 1-15: EMC data 1-12
Fig. 1-16: DERATING I/O Bus supply 1-12
Fig. 1-17: Interface specifications 1-12
Fig. 1-18: Connecting the power supply: 1-13
Fig. 1-19: Connecting inputs and outputs 1-14
Fig. 1-20: Connector pin assignments X1 1-14
Fig. 1-21: Interface pin assignments of X10 and X16 1-15
Fig. 1-22: Connector pin assignments BT-BUS X15 1-15
Fig. 3-1: Hazard classification (according to ANSI Z535) 3-1
Fig. 5-1: Type code PPC-R01.2 5-1
Fig. 5-2: Type code PPC-R02.2 5-2

Artisan Technology Group - Quality Instrumentation ... Guaranteed | (888) 88-SOURCE | www.artisantg.com

Artisan Technology Group - Quality Instrumentation ... Guaranteed | (888) 88-SOURCE | www.artisantg.com

7 Index

A

Air pressure 1-11
Ambient temperature 1-11
Appropriate use
  Area of application 2-2
  Introduction 2-1
  Uses 2-2
Attachment 1-11

B

Battery backup 4-1
BT bus 1-1, 1-12, 1-15
Bus board 1-9

C

COM interface 1-1, 1-15
Connector pin assignments 1-14
Current consumption 1-11

D

Data transfer 1-1
Digital I/O 4-1
Dimensioned drawing 1-3
DIN rail 1-6
DIP-Switch 1-9
Display 4-1

E

EMC 1-12

F

Field bus interfaces 1-2
Firmware 4-1

G

Grounding 1-8
Grounding point 1-8
Grounding stud 1-8

H

Housing dimensions 1-11

I

I/O Bus supply 1-11
I/O modules 1-2, 1-6
Inappropriate use 2-2
  Consequences, Discharge of liability 2-1
Indramat standard 4-1
Inputs and outputs 1-12
Inputs and Outputs 1-14
Installation 1-6
Installation Dimensions 1-4
Interface pin assignments 1-15
Interfaces 1-1, 1-12

Artisan Technology Group - Quality Instrumentation ... Guaranteed | (888) 88-SOURCE | www.artisantg.com

M

Maximum configuration 1-6
Module carrier 1-9
Module carrier address 1-9
Module carrier RMB02.2-02 1-4
Module carrier RMB02.2-04 1-5
Module carrier system 1-2

O

Operator input terminal 1-1

P

PC/104 interface 4-1
PC/104 modules 1-2
PMM 4-1
Power supply 1-8, 1-11, 1-13
PPC-R01.2 1-1
PPC-R02.2 1-1
PROG interface 1-15
Programming interface (PROG) 1-12
Protection category 1-11
PSM 4-1

R

Real-time clock 4-1
RECO bus 1-6
RECO/SPS interface 4-1
RECO02 modules 1-6
Relative humidity 1-11
Retaining screw 1-6
RMB02.2-02 1-2
RMB02.2-04 1-2

S

Safety Instructions for Electric Drives and Controls 3-1
Screening 1-8
SERCOS interface 4-1
Serial Indramat Interface 1-1
Serial interface 1-12
Slot address 1-9
Specifications 1-11
System grounding 1-8

T

Type code 5-1, 5-2

U

Use *See* appropriate use a*nd inappropriate u*se
User software 4-1

W

Weight 1-11

Artisan Technology Group - Quality Instrumentation ... Guaranteed | (888) 88-SOURCE | www.artisantg.com

X

X1 1-14
X10 1-15
X15 1-15
X16 1-15

Artisan Technology Group - Quality Instrumentation ... Guaranteed | (888) 88-SOURCE | www.artisantg.com

Artisan Technology Group - Quality Instrumentation ... Guaranteed | (888) 88-SOURCE | www.artisantg.com

8 Service & Support

8.1 Helpdesk

Unser Kundendienst-Helpdesk im Hauptwerk Lohr am Main steht Ihnen mit Rat und Tat zur Seite. Sie erreichen uns

- telefonisch: **+49 (0) 9352 40 50 60**
  über Service Call Entry Center Mo-Fr 07:00-18:00
- per Fax: **+49 (0) 9352 40 49 41**
- per e-Mail: **service@indramat.de**

Our service helpdesk at our headquarters in Lohr am Main, Germany can assist you in all kinds of inquiries. Contact us

- by phone: **+49 (0) 9352 40 50 60**
  via Service Call Entry Center Mo-Fr 7:00 am - 6:00 pm
- by fax: **+49 (0) 9352 40 49 41**
- by e-mail: **service@indramat.de**

8.2 Service-Hotline

Außerhalb der Helpdesk-Zeiten ist der Service direkt ansprechbar unter

+49 (0) 171 333 88 26
oder **+49 (0) 172 660 04 06**

After helpdesk hours, contact our service department directly at

+49 (0) 171 333 88 26
or **+49 (0) 172 660 04 06**

8.3 Internet

Ergänzende Hinweise zu Service, Reparatur und Training sowie die **aktuellen** Adressen unserer Service- und Vertriebsbüros finden Sie unter **www.indramat.de** – einige Angaben in dieser Dokumentation können inzwischen überholt sein.

Außerhalb Deutschlands nehmen Sie bitte zuerst Kontakt mit Ihrem lokalen Ansprechpartner auf.

- ☐ Verkaufsniederlassungen
- ☐ Niederlassungen mit Kundendienst

Additional notes about service, repairs and training as well as the **actual** addresses of our sales- and service facilities are available on the Internet at **www.indramat.de** – some information in this documentation may meanwhile be obsolete.

Please contact the sales & service offices in your area first.

- ☐ sales agencies
- ☐ offices providing service

8.4 Vor der Kontaktaufnahme... - Before contacting us...

Wir können Ihnen schnell und effizient helfen wenn Sie folgende Informationen bereithalten:

1. detaillierte Beschreibung der Störung und der Umstände.
2. Angaben auf dem Typenschild der betreffenden Produkte, insbesondere Typenschlüssel und Seriennummern.
3. Tel.-/Faxnummern und e-Mail-Adresse, unter denen Sie für Rückfragen zu erreichen sind.

For quick and efficient help, please have the following information ready:

1. Detailed description of the failure and circumstances.
2. Information on the type plate of the affected products, especially type codes and serial numbers.
3. Your phone/fax numbers and e-mail address, so we can contact you in case of questions.

Artisan Technology Group - Quality Instrumentation ... Guaranteed | (888) 88-SOURCE | www.artisantg.com

8.5 Kundenbetreuungsstellen - Sales & Service Facilities

Deutschland – Germany

vom Ausland: (0) nach Landeskennziffer weglassen!
from abroad: don't dial (0) after country code!

Vertriebsgebiet Mitte Germany Centre	**SERVICE**	**SERVICE**	**SERVICE**
Rexroth Indramat GmbH Bgm.-Dr.-Nebel-Str. 2 97816 Lohr am Main **Kompetenz-Zentrum Europa** Tel.: +49 (0)9352 40-0 Fax: +49 (0)9352 40-4885	**CALL ENTRY CENTER** **MO – FR** **von 07:00 - 18:00 Uhr** **from 7 am – 6 pm** **Tel. +49 (0) 9352 40 50 60** service@indramat.de	**HOTLINE** **MO – FR** **von 17:00 - 07:00 Uhr** **from 5 pm - 7 am** + SA / SO **Tel.: +49 (0)172 660 04 06** **oder / or** **Tel.: +49 (0)171 333 88 26**	**ERSATZTEILE / SPARES** verlängerte Ansprechzeit - extended office time - ♦ nur an Werktagen - only on working days - ♦ von 07:00 - 18:00 Uhr - from 7 am - 6 pm - **Tel. +49 (0) 9352 40 42 22**
Vertriebsgebiet Süd Germany South	Gebiet Südwest Germany South-West	Vertriebsgebiet Ost Germany East	Vertriebsgebiet Ost Germany East
Rexroth Indramat GmbH Landshuter Allee 8-10 80637 München Tel.: +49 (0)89 127 14-0 Fax: +49 (0)89 127 14-490	Bosch Rexroth AG Vertrieb Deutschland – VD-BI Geschäftsbereich Rexroth Indramat Regionalzentrum Südwest Ringstrasse 70 / Postfach 1144 70736 Fellbach / 70701 Fellbach Tel.: +49 (0)711 57 61–100 Fax: +49 (0)711 57 61–125	Bosch Rexroth AG Beckerstraße 31 09120 Chemnitz Tel.: +49 (0)371 35 55-0 Fax: +49 (0)371 35 55-333	Bosch Rexroth AG Regionalzentrum Ost Walter-Köhn-Str. 4d 04356 Leipzig Tel.: +49 (0)341 25 61-0 Fax: +49 (0)341 25 61-111
Vertriebsgebiet West Germany West	Vertriebsgebiet Mitte Germany Centre	Vertriebsgebiet Nord Germany North	Vertriebsgebiet Nord Germany North
Bosch Rexroth AG Vertrieb Deutschland Regionalzentrum West Borsigstrasse 15 40880 Ratingen Tel.: +49 (0)2102 409-0 Fax: +49 (0)2102 409-406	Bosch Rexroth AG Regionalzentrum Mitte Waldecker Straße 13 64546 Mörfelden-Walldorf Tel.: +49 (0) 61 05 702-3 Fax: +49 (0) 61 05 702-444	Bosch Rexroth AG Walsroder Str. 93 30853 Langenhagen Tel.: +49 (0) 511 72 66 57-0 Fax: +49 (0) 511 72 66 57-95	Bosch Rexroth AG Kieler Straße 212 22525 Hamburg Tel.: +49 (0) 40 81 955 966 Fax: +49 (0) 40 85 418 978

Artisan Technology Group - Quality Instrumentation ... Guaranteed | (888) 88-SOURCE | www.artisantg.com

Europa (West) - Europe (West)

vom Ausland: (0) nach Landeskennziffer weglassen,
from abroad: don't dial (0) after country code,

Italien: 0 nach Landeskennziffer mitwählen
Italy: dial 0 after country code

Austria - Österreich Bosch Rexroth GmbH Bereich Indramat Stachegasse 13 1120 Wien Tel.: +43 (0)1 985 25 40 Fax: +43 (0)1 985 25 40-93	Austria – Österreich Bosch Rexroth G.m.b.H. Gesch.ber. Rexroth Indramat Industriepark 18 4061 Pasching Tel.: +43 (0)7221 605-0 Fax: +43 (0)7221 605-21	Belgium - Belgien Bosch Rexroth nv Gesch.ber. Rexroth Indramat Industrielaan 8 1740 Ternat Tel.: +32 (0)2 5830719 Fax: +32 (0)2 5830731 indramat@rexroth.be	Denmark - Dänemark Bosch Rexroth A/S Zinkvej 6 8900 Randers Tel.: +45 (0)87 11 90 60 Fax: +45 (0)87 11 90 61
Great Britain – Großbritannien Bosch Rexroth Ltd. Rexroth Indramat Division Broadway Lane, South Cerney Cirencester, Glos GL7 5UH Tel.: +44 (0)1285 863000 Fax: +44 (0)1285 863030 sales@indramat.co.uk service@indramat.co.uk	Finland - Finnland Rexroth Mecman Oy Rexroth Indramat division Ansatie 6 017 40 Vantaa Tel.: +358 (0)9 84 91-11 Fax: +358 (0)9 84 91-13 60	France - Frankreich Bosch Rexroth S.A. Division Rexroth Indramat Avenue de la Trentaine BP. 74 77503 CHELLES CEDEX Tel.: +33 (0)164 72-70 00 Fax: +33 (0)164 72-63 00 **Hotline:** +33 (0)608 33 43 28	France - Frankreich Bosch Rexroth S.A. Division Rexroth Indramat 1270, Avenue de Lardenne 31100 Toulouse Tel.: +33 (0)5 61 49 95 19 Fax: +33 (0)5 61 31 00 41
France - Frankreich Bosch Rexroth S.A. Division Rexroth Indramat 91, Bd. Irène Joliot-Curie 69634 Vénissieux – Cedex Tel.: +33 (0)4 78 78 53 65 Fax: +33 (0)4 78 78 53 62	Italy - Italien Bosch Rexroth S.p.A. Via G. Di Vittoria, 1 20063 Cernusco S/N.MI Tel.: +39 02 2 365 270 Fax: +39 02 700 408 252378	Italy - Italien Bosch Rexroth S.p.A. Via Paolo Veronesi, 250 10148 Torino Tel.: +39 011 224 88 11 Fax: +39 011 220 48 04	Italy - Italien Bosch Rexroth S.p.A. Via del Progresso, 16 (Zona Ind.) 35020 Padova Tel.: +39 049 8 70 13 70 Fax: +39 049 8 70 13 77
Italy - Italien Bosch Rexroth S.p.A. Via Mascia, 1 80053 Castellamare di Stabia NA Tel.: +39 081 8 71 57 00 Fax: +39 081 8 71 68 85	Italy - Italien Bosch Rexroth S.p.A. Viale Oriani, 38/A 40137 Bologna Tel.: +39 051 34 14 14 Fax: +39 051 34 14 22	Netherlands - Niederlande/Holland Bosch Rexroth B.V. Kruisbroeksestraat 1 (P.O. Box 32) 5281 RV Boxtel Tel.: +31 (0)411 65 19 51 Fax: +31 (0)411 65 14 83 indramat@hydraudyne.nl	Netherlands - Niederlande/Holland Bosch Rexroth Services B.V. Kruisbroeksestraat 1 (P.O. Box 32) 5281 RV Boxtel Tel.: +31 (0)411 65 19 51 Fax: +31 (0)411 67 78 14
Norway - Norwegen Bosch Rexroth AS Rexroth Indramat Division Berghagan 1 or: Box 3007 1405 Ski-Langhus 1402 Ski Tel.: +47 (0)64 86 41 00 Fax: +47 (0)64 86 90 62 jul.ruud@rexroth.no	Spain - Spanien Bosch Rexroth S.A. Divisiòn Rexroth Indramat Centro Industrial Santiga Obradors s/n 08130 Santa Perpetua de Mogoda Barcelona Tel.: +34 9 37 47 94 00 Fax: +34 9 37 47 94 01	Spain - Spanien Goimendi S.A. División Rexroth Indramat Parque Empresarial Zuatzu C/ Francisco Grandmontagne no.2 20018 San Sebastian Tel.: +34 9 43 31 84 21 - service: +34 9 43 31 84 56 Fax: +34 9 43 31 84 27 - service: +34 9 43 31 84 60 satindramat-goimendi@adegi.es	Sweden - Schweden Rexroth Mecman Svenska AB Rexroth Indramat Division Varuvägen 7 125 81 Stockholm Tel.: +46 (0)8 727 92 00 Fax: +46 (0)8 647 32 77
Sweden - Schweden Rexroth Mecman Svenska AB Indramat Support Ekvändan 7 254 67 Helsingborg Tel.: +46 (0) 42 38 88 -50 Fax: +46 (0) 42 38 88 -74	Switzerland West - Schweiz West Bosch Rexroth Suisse SA Département Rexroth Indramat Rue du village 1 1020 Renens Tel.: +41 (0)21 632 84 20 Fax: +41 (0)21 632 84 21	Switzerland East - Schweiz Ost Bosch Rexroth Schweiz AG Geschäftsbereich Indramat Hemrietstrasse 2 8863 Buttikon Tel. +41 (0) 55 46 46 205 Fax +41 (0) 55 46 46 222	

Artisan Technology Group - Quality Instrumentation ... Guaranteed | (888) 88-SOURCE | www.artisantg.com

Europa (Ost) - Europe (East)

vom Ausland: (0) nach Landeskennziffer weglassen
from abroad: don't dial (0) after country code

Czech Republic - Tschechien	Czech Republic - Tschechien	Hungary - Ungarn	Poland – Polen
Bosch -Rexroth, spol.s.r.o. Hviezdoslavova 5 627 00 Brno Tel.: +420 (0)5 48 126 358 Fax: +420 (0)5 48 126 112	DEL a.s. Strojírenská 38 Zdar nad Sázavou 591 01 Czech republic Tel.: +420 616 64 3144 Fax: +420 616 216 57	Bosch Rexroth Kft. Angol utca 34 1149 Budapest Tel.: +36 (1) 364 00 02 Fax: +36 (1) 383 19 80	Bosch Rexroth Sp.zo.o. Biuro Poznan ul. Dabrowskiego 81/85 60-529 Poznan Tel.: +48 061 847 64 62 /-63 Fax: +48 061 847 64 02
Rumania - Rumänien	**Russia - Russland**	**Russia - Russland**	**Turkey - Türkei**
Bosch Rexroth Sp.zo.o. Str. Drobety nr. 4-10, app. 14 70258 Bucuresti, Sector 2 Tel.: +40 (0)1 210 48 25 +40 (0)1 210 29 50 Fax: +40 (0)1 210 29 52	Bosch Rexroth Wolokolamskoje Chaussee 73 Zimmer 406, 408 RUS – 123424 Moskau Tel.: +7 095/ 232 08 34 +7 095/ 232 08 35 Fax: +7 095/ 232 08 36 info.rex@rexroth.ru	ELMIS 10, Internationalnaya Str. 246640 Gomel, Belarus Tel.: +375/ 232 53 42 70 Fax: +375/ 232 53 37 69 elmis_ltd@yahoo.com	Bosch Rexroth Otomasyon San & Tic. A..S. Fevzi Cakmak Cad No. 3 34630 Sefaköy Istanbul Tel.: +90 212 541 60 70 Fax: +90 212 599 34 07
Slowenia - Slowenien			
DOMEL Otoki 21 64 228 Zelezniki Tel.: +386 5 5117 152 Fax: +386 5 5117 225 brane.ozebek@domel.si			

Artisan Technology Group - Quality Instrumentation ... Guaranteed | (888) 88-SOURCE | www.artisantg.com

Africa, Asia, Australia – incl. Pacific Rim

vom Ausland: (0) nach Landeskennziffer weglassen!
from abroad: don't dial (0) after country code!

Australia - Australien AIMS - Australian Industrial Machinery Services Pty. Ltd. Unit 3/45 Horne ST Campbellfield , VIC 3061 Melbourne Tel.: +61 (0) 393 590 228 Fax: +61 (0) 393 590 286 Hotline: +61 (0) 419 369 195 terryobrien@aimservices.com.au	Australia - Australien Bosch Rexroth Pty. Ltd. No. 7, Endeavour Way Braeside Victoria, 31 95 Melbourne Tel.: +61 (0)3 95 80 39 33 Fax: +61 (0)3 95 80 17 33 mel@rexroth.com.au	China Bosch Rexroth Ltd. Wai Gaoqiao Free Trade Zone No.122, Fu Te Dong Yi Road Shanghai 200131 - P.R.China Tel.: +86 21 58 66 30 30 Fax: +86 21 58 66 55 23 roger.shi_sh@boschrexroth.com.cn	China Bosch Rexroth (China) Ltd. 15/F China World Trade Center 1, Jianguomenwai Avenue Beijing 100004, P.R.China Tel.: +86 10 65 05 03 80 Fax: +86 10 65 05 03 79
China Bosch Rexroth (China) Ltd. A-5F., 123 Lian Shan Street Sha He Kou District Dalian 116 023, P.R.China Tel.: +86 411 46 78 930 Fax: +86 411 46 78 932	China Bosch Rexroth (Changzhou) Co.Ltd. Guangzhou Repres. Office Room 1014-1016, Metro Plaza, Tian He District, 183 Tian He Bei Rd Guangzhou 510075, P.R.China Tel.: +86 20 8755-0030 +86 20 8755-0011 Fax: +86 20 8755-2387	Hongkong Bosch Rexroth (China) Ltd. 6th Floor, Yeung Yiu Chung No.6 Ind Bldg. 19 Cheung Shun Street Cheung Sha Wan, Kowloon, Hongkong Tel.: +852 22 62 51 00 Fax: +852 27 41 33 44 alexis.siu@boschrexroth.com.hk	India - Indien Bosch Rexroth (India) Ltd. Rexroth Indramat Division Plot. A-58, TTC Industrial Area Thane Turbhe Midc Road Mahape Village Navi Mumbai - 400 701 Tel.: +91 (0)22 7 61 46 22 Fax: +91 (0)22 7 68 15 31
India - Indien Bosch Rexroth (India) Ltd. Rexroth Indramat Division Plot. 96, Phase III Peenya Industrial Area Bangalore - 560058 Tel.: +91 (0)80 8 39 73 74 Fax: +91 (0)80 8 39 43 45	Indonesia - Indonesien PT. Rexroth Wijayakusuma Building # 202, Cilandak Commercial Estate Jl. Cilandak KKO, Jakarta 12560 Tel.: +62 21 7891169 (5 lines) Fax: +62 21 7891170 - 71	Japan Bosch Rexroth Automation Corp. Service Center Japan Yutakagaoka 1810, Meito-ku, NAGOYA 465-0035, Japan Tel.: +81 (0)52 777 88 41 +81 (0)52 777 88 53 +81 (0)52 777 88 79 Fax: +81 (0)52 777 89 01	Japan Bosch Rexroth Automation Corp. Rexroth Indramat Division 1F, I.R. Building Nakamachidai 4-26-44, Tsuzuki-ku YOKOHAMA 224-0041, Japan Tel.: +81 (0)45 942 72 10 Fax: +81 (0)45 942 03 41
Korea Bosch Rexroth-Korea Ltd. 1515-14 Dadae-Dong, Saha-Ku Rexroth Indramat Division Pusan Metropolitan City, 604-050 Republic of South Korea Tel.: +82 (0)51 26 00 741 Fax: +82 (0)51 26 00 747 gyhan@rexrothkorea.co.kr	Malaysia Bosch Rexroth Sdn.Bhd. Head Office No. 3, Block B, Jalan SS 13/5 Subang Jaya Industrial Estate 47500 Petaling Jaya - Selangor Tel.: +60 (0) 3 73 44 870 Fax: +60 (0) 3 73 44 864 hockhwa@hotmail.com	Singapore - Singapur Robert Bosch (SEA) Pte Ltd. Dept. RBSI-R/SAT 38-C Jalan Pemimpin Singapore 577180 Tel.: +65 35 05 470 Fax: +65 35 05 313 kenton.peh@sg.bosch.com	South Africa - Südafrika TECTRA Automation (Pty) Ltd. 28 Banfield Road,Industria North RSA - Maraisburg 1700 Tel.: +27 (0)11 673 20 80 Fax: +27 (0)11 673 72 69 Hotline: +27 (0)82 903 29 23 georgv@tectra.co.za
Taiwan Rexroth Uchida Co., Ltd. No.17, Lane 136, Cheng Bei 1 Rd., Yungkang, Tainan Hsien Taiwan, R.O.C. Tel.: +886 (0)6 25 36 565 Fax: +886 (0)6 25 34 754 indramat@mail.net.tw	Thailand NC Advance Technology Co. Ltd. 59/76 Moo 9 Ramintra road 34 Tharang, Bangkhen, Bangkok 10230 Tel.: +66 2 943 70 62 +66 2 943 71 21 Fax: +66 2 509 23 62 sonkawin@hotmail.com		

Artisan Technology Group - Quality Instrumentation ... Guaranteed | (888) 88-SOURCE | www.artisantg.com

Nordamerika – North America

USA Hauptniederlassung - Headquarters	USA Central Region - Mitte	USA Southeast Region - Südwest	USA SERVICE-HOTLINE
Bosch Rexroth Corporation Rexroth Indramat Division 5150 Prairie Stone Parkway Hoffman Estates, IL 60192-3707 Tel.: +1 847 6 45 36 00 Fax: +1 847 6 45 62 01 service@indramat.com	Bosch Rexroth Corporation Rexroth Indramat Division Central Region Technical Center Auburn Hills, MI 48326 Tel.: +1 248 3 93 33 30 Fax: +1 248 3 93 29 06	Bosch Rexroth Corporation Rexroth Indramat Division Southeastern Technical Center 3625 Swiftwater Park Drive Suwanee, Georgia 30174 Tel.: +1 770 9 32 32 00 Fax: +1 770 9 32 19 03	- 7 days x 24hrs - **+1-800-860-1055**
USA East Region –Ost	USA Northeast Region – Nordost	USA West Region – West	
Bosch Rexroth Corporation Rexroth Indramat Division Charlotte Regional Sales Office 14001 South Lakes Drive Charlotte, North Carolina 28273 Tel.: +1 704 5 83 97 62 +1 704 5 83 14 86	Bosch Rexroth Corporation Rexroth Indramat Division Northeastern Technical Center 99 Rainbow Road East Granby, Connecticut 06026 Tel.: +1 860 8 44 83 77 Fax: +1 860 8 44 85 95	Bosch Rexroth Corporation 7901 Stoneridge Drive, Suite 220 Pleasant Hill, California 94588 Tel.: +1 925 227 10 84 Fax: +1 925 227 10 81	
Canada East - Kanada Ost	Canada West - Kanada West		
Bosch Rexroth Canada Corporation Burlington Division 3426 Mainway Drive Burlington, Ontario Canada L7M 1A8 Tel.: +1 905 335 55 11 Fax: +1 905 335-41 84 michael.moro@boschrexroth.ca	Bosch Rexroth Canada Corporation 5345 Goring St. Burnaby, British Columbia Canada V7J 1R1 Tel. +1 604 205-5777 Fax +1 604 205-6944 david.gunby@boschrexroth.ca		

Südamerika – South America

Argentina - Argentinien	Argentina - Argentinien	Brazil - Brasilien	Brazil - Brasilien
Bosch Rexroth S.A.I.C. "The Drive & Control Company" Acassusso 48 41/47 1605 Munro Prov. Buenos Aires Tel.: +54 (0)11 4756 01 40 Fax: +54 (0)11 4756 01 36 mannesmann@mannesmannsaic.com.ar	NAKASE Servicio Tecnico CNC Calle 49, No. 5764/66 1653 Villa Balester Prov. - Buenos Aires Tel.: +54 (0) 11 4768 36 43 Fax: +54 (0) 11 4768 24 13 nakase@usa.net nakase@nakase.com	Bosch Rexroth Ltda. Av. Tégula, 888 Ponte Alta, Atibaia SP CEP 12942-440 Tel.: +55 (0)11 4414 56 92 +55 (0)11 4414 56 84 Fax sales: +55 (0)11 4414 57 07 Fax serv.: +55 (0)11 4414 56 86 alexandre.wittwer@rexroth.com.br	Bosch Rexroth Ltda. R. Dr.Humberto Pinheiro Vieira, 100 Distrito Industrial [Caixa Postal 1273] BR - 89220-390 Joinville - SC Tel./Fax: +55 (0)47 473 58 33 Mobil: +55 (0)47 9974 6645 prochnow@zaz.com.br
Mexico	Columbia - Kolumbien		
Bosch Rexroth S.A. de C.V. Calle Neptuno 72 Unidad Ind. Vallejo MEX - 07700 Mexico, D.F. Tel.: +52 5 754 17 11 +52 5 754 36 84 +52 5 754 12 60 Fax: +52 5 754 50 73 +52 5 752 59 43	Reflutec de Colombia Ltda. Calle 37 No. 22-31 Santafé de Bogotá, D.C. Colombia Tel.: +57 1 368 82 67 +57 1 368 02 59 Fax: +57 1 268 97 37 reflutec@inter.net. co		

Artisan Technology Group - Quality Instrumentation ... Guaranteed | (888) 88-SOURCE | www.artisantg.com

2 8 7 5 4 3

Printed in Germany

Rexroth Indramat

Artisan Technology Group - Quality Instrumentation ... Guaranteed | (888) 88-SOURCE | www.artisantg.com

Artisan Technology Group is an independent supplier of quality pre-owned equipment

Gold-standard solutions

Extend the life of your critical industrial, commercial, and military systems with our superior service and support.

We buy equipment

Planning to upgrade your current equipment? Have surplus equipment taking up shelf space? We'll give it a new home.

Learn more!

Visit us at **artisantg.com** for more info on price quotes, drivers, technical specifications, manuals, and documentation.

Artisan Scientific Corporation dba Artisan Technology Group is not an affiliate, representative, or authorized distributor for any manufacturer listed herein.

We're here to make your life easier. How can we help you today?

(217) 352-9330 | sales@artisantg.com | artisantg.com

ARTISAN® TECHNOLOGY GROUP